ESCO
LIFESCIENCES



CelCulture®

CO_2 Incubators

Cradle for Beautiful Cells



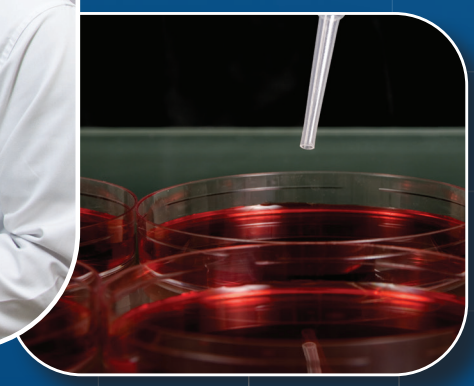

Designed in the USA

Table of Contents

About Esco 03

Esco Products Overview 05

Esco CO_2 Incubators

- CelCulture® 06
- CelCulture® with UV Lamp 14
- CelCulture® with Copper Interior Chamber 15
- CelCulture® with Stainless Steel Exterior 16
- CelCulture® for *In Vitro* Fertilization 17
- CelCulture® with Integrated Cooling System 20
- CelCulture with High Temperature CO_2 Sensor 22
- CelCulture® with High Heat Sterilization 24

Options and Accessories 28

CelCradle™ Bioreactor 33





Welcome to Esco Lifesciences

Esco Lifesciences' vision is to provide enabling technologies for scientific discoveries to make human lives healthier and safer.

Esco Lifesciences is committed to delivering innovative solutions for the clinical, life sciences, research, industrial, laboratory, pharmaceutical, and IVF communities. With the most extensive product line in the industry, Esco has passed a number of international standards and certifications. Esco Lifesciences represents innovation and forward-thinking designs, that are of the highest standard quality since 1978.

Availability and Accessibility. Esco Lifesciences has headquarters in Singapore, Indonesia, and Philippines, with manufacturing facilities located in Asia and Europe. Research and Development (R&D) is conducted worldwide spanning the US, Europe and Asia. Sales, services, and marketing subsidiaries are located in 42 major markets including US, UK, Japan, China and India. Esco regional distribution centers are located in Singapore, Malaysia, Thailand, Vietnam, Myanmar, Indonesia, Philippines, Bangladesh, Hong Kong, Taiwan, South Korea, China, Japan, India, UAE, Central and South Africa, Denmark, Germany, Italy, Lithuania, Russia, United Kingdom, and USA. Because of our worldwide presence, you can be sure that Esco is within your reach.

High Quality, Reliable, and Dependable. Esco Lifesciences products are of high quality, reliable, and dependable. Cross-functional teams from Esco Production, R&D, Quality Assurance, and Senior Management, are regularly assembled to review and implement areas for improvement.

Esco Lifesciences Cares for Your Safety. Esco Lifesciences focuses on providing safety not just for your samples, but also for you and the environment.

Esco Lifesciences Cares for Your Comfort. Building ergonomic designs and reducing noise levels of the units ensure comfort for our users.

Esco Lifesciences Cares for the Environment. Esco Lifesciences incorporates the latest proven technologically advanced components available. One in every four of Esco's employees is involved in Research and Development and are evaluating new components or designs for better efficiency. Whenever a new technology is available, Esco Lifesciences redesigns technology into our new products that will use lesser energy.

Customer Service and Support. Our service does not stop once purchase has been done. Esco Lifesciences gives on-time customer service such as service training, preventive maintenance, and re-certification, to respond to your equipment needs. Esco Lifesciences also offers free end-user seminars and provides educational materials and informative videos.

As Esco Lifesciences takes the opportunity to respond to the world's needs, we aim not only to contribute to the advancement of scientific discoveries but also in making the world a safer, healthier, and better place to live in.





Research and Development

An integral part of our business planning effort is based on managing a robust research and development program in Singapore, China, Europe, and USA, balanced against an investment in service support, training and customer education. Compared to industry averages, Esco invests a significant percentage of annual revenues in research and development.

As a result of our investment, and with continuous feedback and idea evaluation among our research, global sales, marketing, purchasing and manufacturing teams; Esco products reflect the best contemporary designs in performance, ergonomics and customer satisfaction.

- Engineers located in technology centers in Singapore, China, Europe and the USA
- Growing patent portfolio
- Core competencies:
  - Embedded system, sensor and software development and integration
  - Containment engineering for biohazards, chemical vapors and hazardous powders
  - Decontamination cycle development
  - Computational fluid dynamics
  - Temperature, humidity, gas and environmental control
  - Imaging systems
  - Wireless and remote monitoring
  - cGMP laboratory design

Production and Quality

Our manufacturing advantage stems from extensive degree of vertical integration; enabled by our world-leading high throughput. All processes, with a few exceptions, are performed in-house. This allows us to achieve a truly world class reliability and quality.

- Incoming materials inspection and warehousing
- CNC-controlled sheet metal fabrication
- Full range of welding including MIG, TIG, Spot, Orbital, and Robotic welding
- Environment-friendly powder coating lines
- Electromechanical final product assembly
- Electrical / electronics sub-assembly
- Multi-step electrical and physical performance testing
- Independent quality control at each step in the production cycle
- Microbiology, chemistry, containment test labs
- Instruments calibration laboratory

Esco's focus on quality and timeliness is relentless. Continuous improvement is a mantra. Cross-functional teams from Esco Production, R&D, Quality Assurance, Senior Management, are regularly assembled to review and implement areas for improvement.

Esco manufacturing site is audited by certification bodies like ISO 9001, ISO 140001, ISO 13485, NSF International, UL International, and TUV Nord Germany. Our machines safety, workplace safety, and environmental safety are also audited by different government institutions.

All of the third party certifications and audits help our customers to ensure Esco manufacturing site's consistency of producing high quality products and continual improvements.



Products and Applications

Life Sciences Laboratory Equipment

Sample Preparation

- Class I Biological Safety Cabinets
- Class II Biological Safety Cabinets
- Class II Type A2 Biological Safety Cabinets
- Class II Type B1 Biological Safety Cabinets
- Class II Type B2 Biological Safety Cabinets
- Class III Biological Safety Cabinets
- Horizontal Laminar Flow Cabinets
- Vertical Laminar Flow Cabinets
- Laboratory Animal Research Workstations
- Laboratory Centrifuges

Sample Cultivation

- CO_2 Incubators, Direct Heat Air-Jacketed
- CO_2 Incubators with Cooling System
- CO_2 Incubators with High Heat Sterilization
- Laboratory Shakers

Amplification and Detection

- Conventional Thermal Cyclers
- Microplate Shakers
- PCR Cabinets

Sample Storage & Sample Protection Solutions

- Laboratory Refrigerators and Freezers
- Ultra-low Temperature Freezers
- Remote Monitoring, Datalogging, and Programming Software
- Wireless Monitoring System

Chemical Research

- Ducted Fume Hoods
- Ductless Fume Hoods
- Filtered Storage Cabinets
- Powder Weighing Balance Enclosure
- Exhaust Blowers
- Fume Hood Airflow Monitor

General Equipment

Laboratory Thermostatic Products

- Forced Convection Laboratory Oven
- Forced Convection Laboratory Incubator
- Natural Convection Laboratory Incubator
- Refrigerated Laboratory Incubator

Medical / IVF Equipment

Innovative Time-Lapse Imaging

- MIRI® TL6 and MIRI® TL12

Embryo Culture

- MIRI® Multiroom Incubator
- MIRI® Humidity Multiroom Incubator
- Mini MIRI® Dry and Humidity Incubator
- CelCulture® CO_2 Incubator
- MIRI® II-12 Multiroom Incubator

Sample Handling

- Esco Multi-Zone ART Workstation
- MIRI® AVT
- Versati™ Tabletop Centrifuge
- Airstream® Laminar Flow Bench

Accurate Quality Control

- MIRI® GA Gas and Temperature Validation Unit

Unique Consumables

- CultureCoin®

Traceability Tool

- MIRI® Evidence

Healthcare

Esco Pharma Products

Airflow Containment

- BioBooth®
- Ceiling Laminar Airflow (CLAF)
- Cytoculture® Cytotoxic Safety Cabinet (CYT)
- Pharmacon™ Downflow Booth
- Esco Garment Storage Cabinet
- Esco Glassware Hoods
- Laminar Flow Horizontal/Vertical Trolley (LFH/VT)
- Laminar Flow Straddle Units
- Evidence Drying Cabinet

Isolation Containment

- Advanced Processing Platform Isolator (APPI)
- Aseptic Containment Isolator (ACTI)
- Blood Cell Labelling Isolator
- Streamline® Closed Restricted Access Barrier System (SLC-RABS)
- Containment Barrier Isolator (CBI)
  - CBI-Unidirectional (CBI-U)
  - CBI-Turbulent (CBI-T)
  - CBI-Class III Biosafety Cabinet (CBI-III)
  - CBI-Hybrid (CBI-H)
- Isoclean® Healthcare Platform Isolator (HPI)
  - HPI-G3-Without Filter Below Work Zone
  - HPI-G3-With Filter Below Work Zone
  - HPI-Inflatable Seal (HPI-IS)
  - HPI - Inflatable Seal - BioVapTM (HPI-IS-BVP)
- General Processing Platform Isolator (GPPI)
  - GPPI-Inflatable Seal (GPPI-IS)
  - GPPI-Static Seal (GPPI-SS)
- Streamline® Compounding Isolator (SCI)
- Streamline® Containment Isolator - Class III (SCI-III)
- Technetium Dispensing Isolator
- Turbulent Flow Aseptic Isolator™ (TFAI™)
- Weighing and Dispensing Containment Isolator (WDCI)

Cross Contamination Facility Integrated Barrier

- BioPass™ Pass Through
- Cleanroom Air Showers
- Dynamic Pass Boxes/ Dynamic Floor Laminar Hatches
- Infinity® Air Shower Pass Box
- Esco Sputum Booth
- Infinity® Pass Boxes
- Infinity® Cleanroom Transfer Hatch
- Soft Capsule® Soft Wall Cleanroom

Ventilation Containment

- Ventilated Balance Enclosure

Esco VacciXcell Products

Tide Motion Bioreactors

- CelXrocker™ (CXR)
- MiniTide®
- CelCradle™ (CC)
- CelCradle X® (CCX)
- TideXcell® (TXL)

Stirred Tank Bioreactors

- BioXcell®
- StirCradle™
- StirCradle™ PRO
- VXL™ Hybrid

Harvesting System

- CelShaker™
- CelCradle X® Semi-automated Harvester System(CCX-SAH)
- TideXcell® Harvester System (TXLHS)

Cell Culture Monitoring, Media and Consumables

- Super Plus™
- Plus™ Vero
- Plus™ MDCK
- Plus™ MDCK II
- BioNOC™ II macrocarriers
- GlucCell™ Glucose Monitoring System
- CVD Kit

Filling Line Equipment

- Traditional Filling Line
- cRABS (Closed Restricted Access Barrier System)
- oRABS (Open Restricted Access Barrier System)

Integrated Solutions

- Cell Processing Isolator (CPI)
- Cell Processing Center

Esco TaPestle Rx Products and Services

Pharmacy Automation and Compounding Supply

- Compounding Pharmacy Isolators (SCI, HPI, CBI, GPPI)
- Safety Cabinets and Enclosures (CYT, Class II BSC, VBE, LFC)
- Filling Line Isolators/RABS

Radiopharmacy Equipment

- Blood Cell Labeling Isolator
- Cytoculture® Lead-Shielded Class II Biosafety Cabinet
- Frontier® Radioisotope™ Fume Hood
- GMP-compliant Radioisotope Dispensing Isolator
- Radiopharmacy Hood (Lead Shielded Biological Safety Cabinet)
- Technetium Dispensing Isolator



CelCulture®
CO_2 Incubators

INTRODUCTION

CO_2 incubators are widely used in scientific research to grow and maintain cell cultures. Typical fields of application include tissue engineering, *in vitro* fertilization, neuroscience, cancer research, and other mammalian cell research applications.

Sleek, reliable, and intuitive, Esco CelCulture® CO_2 incubators provide complete sample protection that brings your scientific dreams one step closer to reality.

KEY FEATURES

CelCulture® CO_2 INCUBATORS

Cradle for Beautiful Cells



CelCulture® CO_2 Incubators available in 3 sizes (50 L, 170 L, and 240 L).

ULPA FILTER*

- 99.999% efficient, superior to conventional HEPA filters
- Filters air continuously
- Chamber returns to ISO Class 5 air cleanliness in 11 minutes upon door closing to prevent contamination

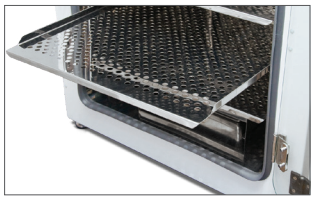

SHELVING

- Perforated shelving to improve uniformity
- Anti-tip
- Stainless steel
- Built-in grip
- Dismantles without tools for easy cleaning

DIRECT HEAT & AIR JACKET

- Fast and uniform heating
- Rapid temperature recovery
- Air jacket improves chamber stability



DUCT WORK

- Directs air flow for rapid recovery and excellent uniformity
- Easily removed for cleaning



COVERED WATER PAN

- Precisely heated by base heater to provide high humidity
- Gentle airflow over water surface accelerates humidity recovery
- Equipped with perforated cover to provide optimum humidification without condensation

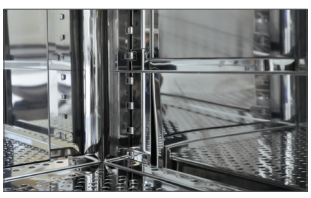

ROUNDED CORNERS

- Seamless design
- Facilitates easier cleaning

O_2 SENSOR

for suppressed O_2 model

- Outstanding sensor accuracy
- Faster response time
- Long-term stability
- Moist heat-proof design

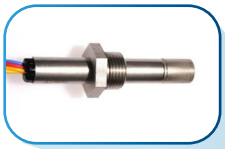

CO_2 SENSOR

- Heat-resistant IR sensor
- Single-beam, dual-wavelength IR sensor is drift-free



TOP COVER

Provides quick access to electrical panel components

DOOR SWITCH

Automatically turns off the blower, heater, UV, and gas supply when the door is opened

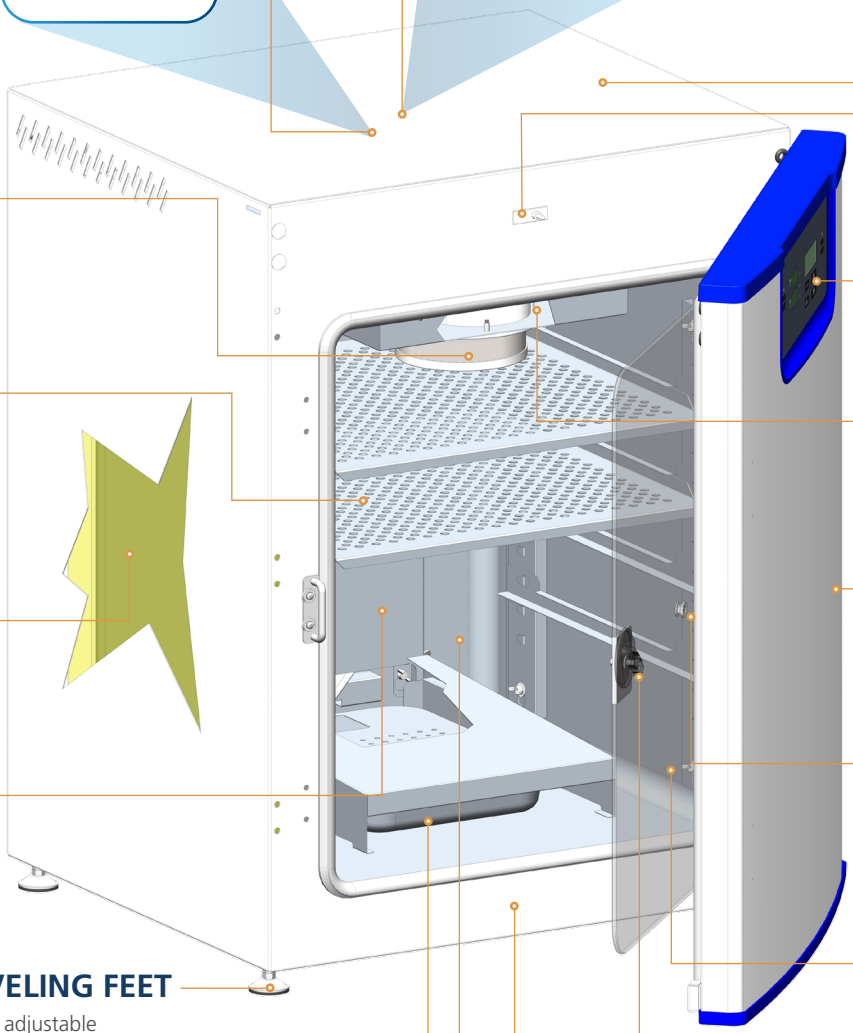

SMARTSENSE ™ MICROCONTROLLER INTERFACE

Intuitive, fully-equipped control and monitoring system

BLOWER*

Gentle airflow in chamber improves recovery and uniformity

OUTER DOOR

- Reversible
- Heated to prevent condensation

SAMPLE PORT

Allows direct measurement of chamber atmosphere such as CO_2 and O_2 concentration

INNER GLASS DOOR

For observing sample cells inside the chamber during operation

DOOR LATCH

To lock / unlock the glass door

LEVELING FEET

Easily adjustable

QUALITY ESCO CONSTRUCTION

- Electrogalvanized steel with white oven-baked epoxy-polyester antimicrobial powder-coated finish.
- External surfaces are powder coated with Esco ISOCIDE™ to eliminate 99.9% of surface bacteria within 24 hours of exposure.
- Ensures a healthier, safer and cleaner lab environment.

**Not available in 50 L Model (including top, back, and bottom plenum)*

VIVOCELL™ PRECISE PARAMETER CONTROL

BEST UNIFORMITY AND CONTROL AMONG THE COMPETITION

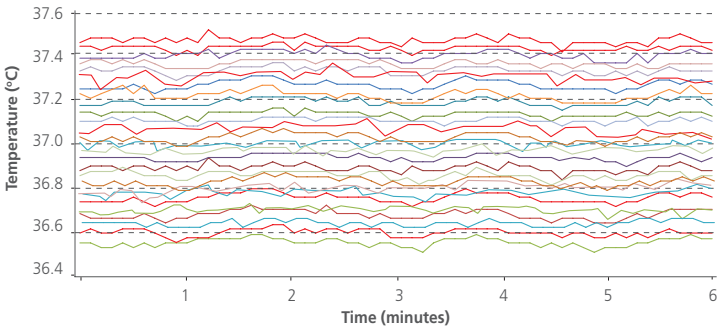

Different lines represent different sensor positions inside the chamber. Esco CelCulture® has uniformity variance of less than ± 0.5˚C which means all the samples are evenly heated.*

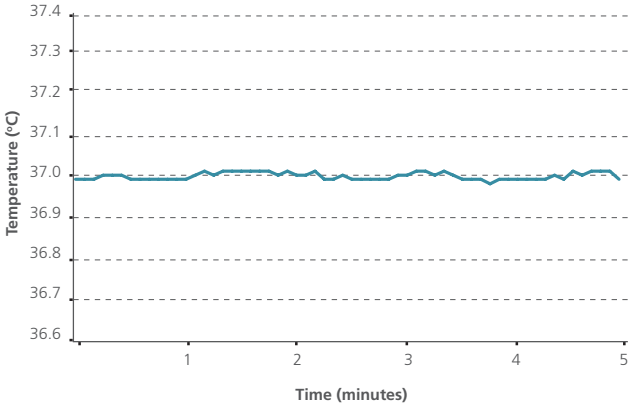

Minimal fluctuation (± 0.2°C) ensures temperature stability.*

FAST CO_2, TEMPERATURE, AND HUMIDITY RECOVERY WITHOUT OVERSHOOT

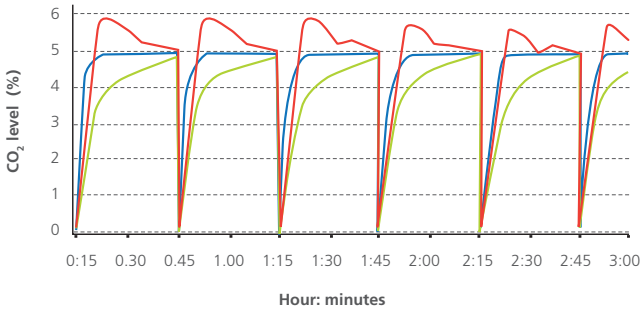

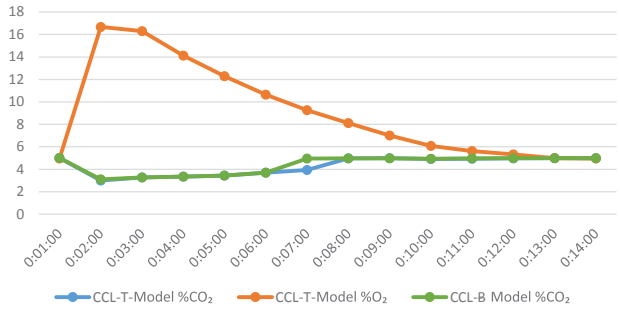

Company A's model: overshoot. Company B's model: slow recovery. Esco CelCulture®: fast recovery, no overshoot.

Precisely-tuned sensor and software result in fast recovery of CO_2 without overshoot. This ensures uniform CO_2 levels even with frequent incubator door openings. Recovery of both temperature and humidity is twice as fast as conventional incubators.

Fast recovery times for %CO_2 and %O_2 are achieved upon 30s door opening.*

Recovery of both temperature and humidity is twice as fast as conventional incubators.

DIRECT HEAT AND AIR JACKET

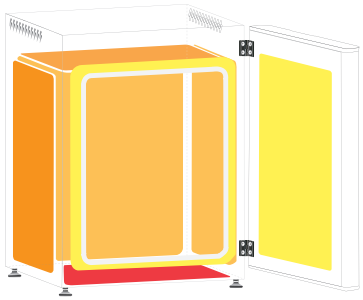

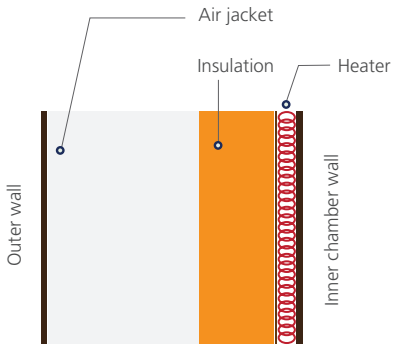

- Direct heating enables rapid temperature recovery while air jacket provides isolation against ambient temperature fluctuations.
- Precise heating in the chamber is achieved by using 8 heaters located in 3 zones. The 3 zones are intelligently controlled by the microcontroller for best temperature uniformity and minimal fluctuation.

Note: For CCL-50_-_-_, CCL-__-_-HITEMP, and CCL-__-_-HHS models, heaters are located in 4 zones (main, bottom, outer door, and back).

The main heater provides precise temperature control.
The bottom heater warms the water pan and provides humidity.
The outer door heater prevents condensation on glass door and facilitates temperature recovery.

VENTIFLOW™ FORCED CONVECTION

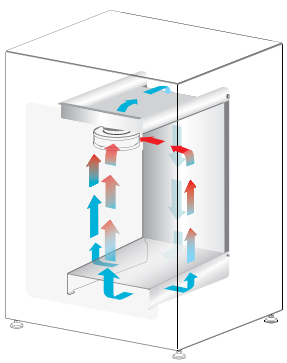

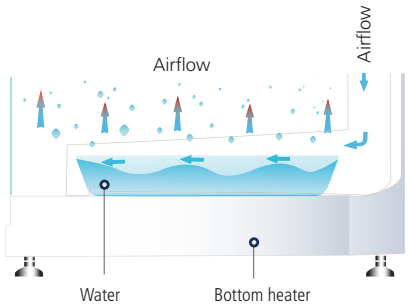

- No disturbance to cell culture.
- Blower automatically stops when door is opened to minimize mixing of chamber and room air.
- Accelerates recovery of chamber air to ISO Class 5 air cleanliness after door closing to prevent contamination.
- Improves CO_2, humidity, and temperature uniformity.
- Filtered air circulates across water pan to accelerate humidifying process.

**Units were factory-tested under controlled environmental conditions per DIN 12880 standard and Esco method. Esco does not guarantee identical results in the field under differing conditions. Original report available upon request. Model used in the test is CCL-170T-8.*

ROBUST CONTAMINATION CONTROL

STERISAFE™ ULPA FILTRATION SYSTEM

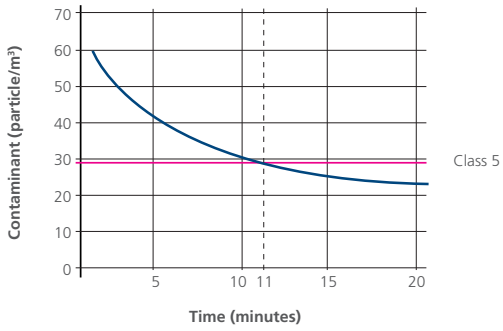

- Chamber air is continuously filtered by ULPA filters to keep the ISO Class 5 air cleanliness. This ensures that all contaminants from both room air and chamber air are filtered, thus only clean air is recirculated.
- ULPA filters operate at 99.999% efficiency, superior to conventional HEPA filters which are 99.99% efficient.
- Chamber achieves ISO Class 5 air cleanliness 11 minutes after door closing.*

** Units were factory-tested under controlled environmental conditions per Esco method. Esco does not guarantee identical results in the field under differing conditions. Original report available upon request. Model used in the test was CCL-170B-8.*

VALIDATED SWIFTCON™ OVERNIGHT DECONTAMINATION CYCLE

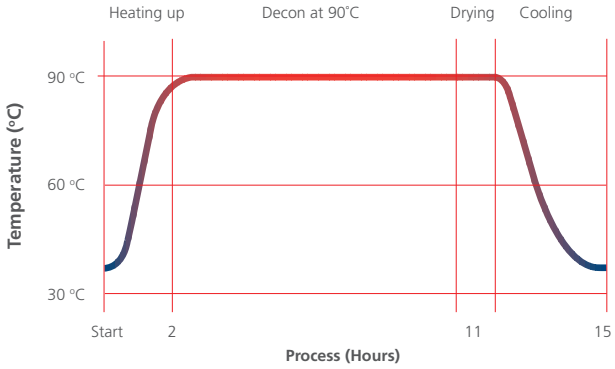

Microorganisms	Before Decon	After Decon
Bacillus atrophaeus	1.59 x 10^6	0
Aspergillus brasiliensis	1.52 x 10^4	0
Pseudomonas aeruginosa	2.38 x 10^6	0
Staphylococcus epidermis	2.33 x 10^6	0
Escherichia coli	1.57 x 10^6	0
Staphylococcus aureus	5.72 x 10^6	0
Enterobacter faecalis	2.15 x 10^6	0

- The automated SwiftCon™ 90˚C moist heat decontamination cycle has been proven effective in deactivating normally resistant fungi, bacterial spores, and vegetative cells by the Health Protection Agency (HPA) in UK.
- Full decontamination cycle completes within 15 hours.
- Chamber is cool and dry at the end of the cycle. No further wipe down is needed.*
- Independently proven to be as effective as high temperature decontamination.
- Lower temperature causes less damage to electronic components, therefore prolongs the life span of the incubator.

**Not applicable to CCL-50L unit since it has no decon pump to dry the chamber and condensation will normally occur in the chamber after the cycle. Further wipe down is therefore required after the cycle is done.*

GAS INJECTION LINES ARE FILTERED



- All gas injection lines are filtered via 0.2 micron inlet filters to remove impurities and contaminants before being injected into the chamber.
- Inlet filters are field-replaceable and are located external to the incubator.

EFFICIENT ENERGY USE



- Built to run optimally in ambient+5 temperature — Meaning less air-con and energy consumption, thus saving electricity bills without compromising the cell cultures.

CONTROLLER TYPE

USER - FRIENDLY SOFTWARE INTERFACE

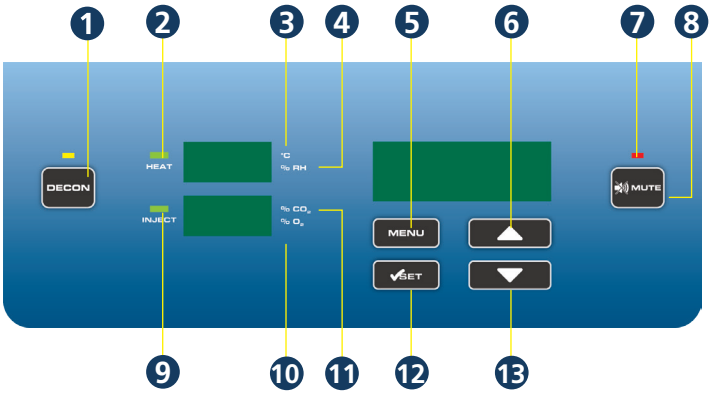

1. **Start / stop decontamination cycle**
2. **HEAT LED**
   Lights up when heat is applied to chamber
3. **°C is lit when displaying the temperature**
4. **% RH is lit when displaying the humidity level**
5. **Enter menu / go back to previous menu**
6. **Scroll up / increase value**
7. **ALARMS LED**
   Will blink when errors and warnings occur
8. **Mute alarms**
9. **INJECT LED**
   Lights up when gas is injected
10. **% O_2 is lit when displaying the O_2 concentration**
11. **% CO_2 is lit when displaying the CO_2 concentration**
12. **Confirm value / enter a menu**
13. **Scroll down / decrease value**

- **Comprehensive, user-configurable alarms:**
  - Temperature
  - CO_2
  - Humidity (if installed)
  - O_2 (if installed)

- **CelAlert™ alarm system reminds user to replace parts.**

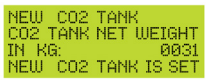

In addition to CO_2 tank low alarm, CelAlert™ has CO_2 tank depletion reminder that automatically calculates how much CO_2 gas is left in the tank and alerts user to replace the tank one week before the gas is depleted. This gives the user some buffer time to place orders for new tanks.

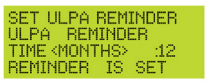

ULPA reminder will alert user to replace ULPA filter.

- **Intelligent data and event logger records all incubator parameters for on-screen recall. A 2 MB built-in flash memory guarantees long-term storage of data.**







- **Diagnostic interface and online quick help provide comprehensive solutions to frequently encountered problems.**

- **New Safety Alarm System**
  - Temperature Fail-Safe System prevents overshooting of temperature display to +0.4°C of the set point.
  - The Auto-Reset Watchdog will automatically reset the system in the unlikely event of system failure,preventing the controller from freezing.
  - %CO_2 Failure Mode prevents build-up of %CO_2 over set point in cases of CO_2 sensor defect.



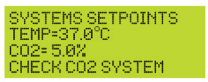



Voyager

Remote Monitoring, Datalogging, Programming Software

Esco Voyager is a PC-based software package developed for the remote monitoring, datalogging, and programming / device configuration of Esco thermostatic products.

A centralized monitoring and control system for the laboratory, Esco Voyager provides extra protection for you and your samples.

Voyager interfaces with individual Esco equipment over RS485 using the EscoBUS communications protocol. Multiple equipment maybe interfaced to a single PC.

Compatible Equipment

- CelCulture® - CO_2 Incubator (CCL)
- CelMate® - CO_2 Incubator (CLM)
- Lexicon® - Ultra-low Temperature Freezer
- Isotherm® - Forced Convection Oven (OFA)
- Isotherm® - Forced Convection Incubator (IFA)
- Isotherm® - Refrigerated Incubator (IFC)
- Isotherm® - Natural Convection Incubator (INA)

TESTING & CERTIFICATION

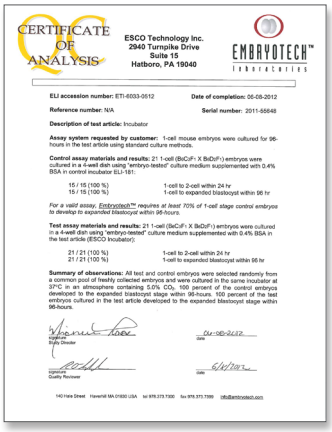

CERTIFICATE OF ANALYSIS

ESCO Technology Inc.
2940 Turnpike Drive
Suite 15
Hatboro, PA 19040

EMBRYOTECH™

For IVF applications, Esco CelCulture® CO_2 incubators are certified embryo-safe.

Rigorously tested with the Mouse Embryo Assay (MEA), the CelCulture® remarkably has 100% embryo survival. The Mouse Embryo Assay (MEA) is the de facto standard test done to demonstrate that a procedure or an article of equipment is safe to use for manipulating human embryos (e.g., *in vitro* fertilization or IVF).

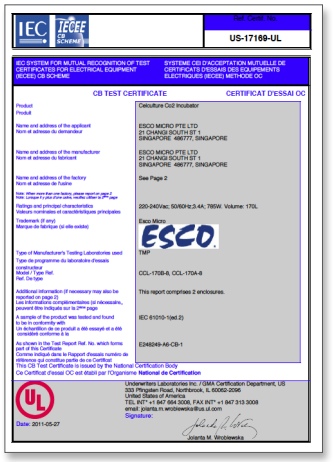

IEC CB SCHEME

Ref. Certif. No.
US-17169-UL

IEC SYSTEM FOR MUTUAL RECOGNITION OF TEST CERTIFICATES FOR ELECTRICAL EQUIPMENT (IECEE) CB SCHEME

SYSTEME CEI D'ACCEPTATION MUTUELLE DE CERTIFICATS D'ESSAIS DES EQUIPEMENTS ELECTRIQUES (IECEE) METHODE OC

CB TEST CERTIFICATE — CERTIFICAT D'ESSAI OC

Product: Celculture Co2 Incubator

ESCO MICRO PTE LTD
21 CHANGI SOUTH ST 1
SINGAPORE 486777, SINGAPORE

ESCO

TMP

CCL-170B-8, CCL-170A-8

This report comprises 2 enclosures.

IEC 61010-1(ed.2)

E248249-A6-CB-1

Underwriters Laboratories Inc. / GMA Certification Department, US
333 Pfingsten Road, Northbrook, IL 60062-2096
United States of America
TEL INT' +1 847 664 3008, FAX INT' +1 847 313 3008
email: jolanta.m.wrobiewska@us.ul.com

Date: 2011-05-27

The Esco CelCulture® CO_2 incubator is listed by Underwriters Laboratory (UL), to meet the requirements of both the U.S. and Canada standards for electrical/ mechanical integrity.

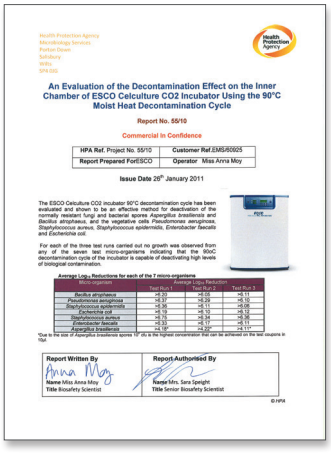

An Evaluation of the Decontamination Effect on the Inner Chamber of ESCO Celculture CO2 Incubator Using the 90°C Moist Heat Decontamination Cycle

Report No. 55/10

Commercial in Confidence

HPA Ref. Project No. 55/10	Customer Ref.EMS/60925
Report Prepared For:ESCO	Operator Miss Anna Moy

Issue Date 28th January 2011

Report Written By — Name Miss Anna Moy, Title Biosafety Scientist

Report Authorised By — Name Mrs. Sara Speight, Title Senior Biosafety Scientist

HPA Validated Decontamination Cycle

The Esco CelCulture® CO_2 Incubator's 90°C decontamination cycle has been evaluated and shown to be an effective method for deactivation of the normally resistant fungi and bacterial spores of *Aspergillus brasiliensis* and *Bacillus atrophaeus*, and the vegetative cells of *Pseudomonas aeruginosa, Staphylococcus aureus, Staphylococcus epidermidis, Enterobacter faecalis* and *Escherichia coli*.

ORDERING INFORMATION

IR SENSOR MODEL WITH STAINLESS STEEL CHAMBER

MODELS	ITEM CODE	DESCRIPTION
CCL-050B-8	2170034	CelCulture® Incubator 50 L, IR Sensor, CO_2 Control, Moist Heat Decon, 230 VAC, 50/60 Hz, (Without Decon Pump)
CCL-170B-8	2170002	CelCulture® Incubator 170 L, IR Sensor, CO_2 Control, ULPA, Moist Heat Decon, 230 VAC, 50/60 Hz
CCL-170B-8-NF	2170068	CelCulture® Incubator 170 L, IR Sensor, CO_2 Control, Moist Heat Decon, 230 VAC, 50/60 Hz, (No ULPA Filter)
CCL-240B-8	2170058	CelCulture® Incubator 240 L, IR Sensor, CO_2 Control, ULPA, Moist Heat Decon, 230 VAC, 50/60 Hz
CCL-240B-8-NF	2170069	CelCulture® Incubator 240 L, IR Sensor, CO_2 Control, Moist Heat Decon, 230 VAC, 50/60 Hz, (No ULPA Filter)
CCL-050B-9	2170054	CelCulture® Incubator 50 L, IR Sensor, CO_2 Control, Moist Heat Decon, 115 VAC, 50/60 Hz (Without Decon Pump)
CCL-170B-9	2170004	CelCulture® Incubator 170 L, IR Sensor, CO_2 Control, ULPA, Moist Heat Decon, 115 VAC, 50/60 Hz
CCL-170B-9-NF	2170075	CelCulture® Incubator 170 L, IR Sensor, CO_2 Control, Moist Heat Decon, 115 VAC, 50/60 Hz, (No ULPA Filter)
CCL-240B-9	2170060	CelCulture® Incubator 240 L, IR Sensor, CO_2 Control, ULPA, Moist Heat Decon, 115 VAC, 50/60 Hz
CCL-240B-9-NF	2170079	CelCulture® Incubator 240 L, IR Sensor, CO_2 Control, Moist Heat Decon, 115 VAC, 50/60 Hz, (No ULPA Filter)

SUPPRESSED O_2 MODEL WITH STAINLESS STEEL CHAMBER

MODELS	ITEM CODE	DESCRIPTION
CCL-050T-8	2170055	CelCulture® Incubator 50 L, IR Sensor, CO_2 & O_2 Control, Moist Heat Decon, 230 VAC, 50/60 Hz (Without Decon Pump)
CCL-170T-8	2170047	CelCulture® Incubator 170 L, IR Sensor, CO_2 & O_2 Control, ULPA, Moist Heat Decon, 230 VAC, 50/60 Hz
CCL-170T-8-NF	2170070	CelCulture® Incubator 170 L, IR Sensor, CO_2 & O_2 Control, Moist Heat Decon, 230 VAC, 50/60 Hz (No ULPA Filter)
CCL-240T-8	2170061	CelCulture® Incubator 240 L, IR Sensor, CO_2 & O_2 Control, ULPA, Moist Heat Decon, 230 VAC, 50/60 Hz
CCL-240T-8-NF	2170071	CelCulture® Incubator 240 L, IR Sensor, CO_2 & O_2 Control, Moist Heat Decon, 230 VAC, 50/60 Hz (No ULPA Filter)
CCL-050T-9	2170056	CelCulture® Incubator 50 L, IR Sensor, CO_2 & O_2 Control, Moist Heat Decon, 115 VAC, 50/60 Hz (Without Decon Pump)
CCL-170T-9	2170048	CelCulture® Incubator 170 L, IR Sensor, CO_2 & O_2 Control, ULPA, Moist Heat Decon, 115 VAC, 50/60 Hz
CCL-170T-9-NF	2170076	CelCulture® Incubator 170L, IR Sensor, CO_2 & O_2 Control, Moist Heat Decon, 115VAC, 50/60HZ (No ULPA Filter)
CCL-240T-9	2170062	CelCulture® Incubator 240 L, IR Sensor, CO_2 & O_2 Control, ULPA, Moist Heat Decon, 115 VAC, 50/60 Hz
CCL-240T-9-NF	2170080	CelCulture® Incubator 240L, IR Sensor, CO_2 & O_2 Control, Moist Heat Decon, 115VAC, 50/60HZ (No ULPA Filter)

IR SENSOR MODEL WITH STAINLESS STEEL CHAMBER WITH FLAT DOOR DESIGN

MODELS	ITEM CODE	DESCRIPTION
CCL-050B-8-FD	2170150	CelCulture® Incubator 50 L, IR Sensor, CO_2 Control, Moist Heat Decon, Flat Door, 230 VAC, 50/60 Hz (Without Decon Pump)
CCL-170B-8-FD	2170117	CelCulture® Incubator 170 L,IR Sensor, CO_2 Control, ULPA, Moist Heat Decon, Flat Door, 230 VAC, 50/60 Hz
CCL-170B-8-NF-FD	2170243	CelCulture® Incubator 170 L, IR Sensor, CO_2 Control, Moist Heat Decon, Flat Door, 230 VAC, 50/60 Hz, (No ULPA Filter)
CCL-240B-8-FD	2170123	CelCulture® Incubator 240 L, IR Sensor, CO_2 Control, ULPA, Moist Heat Decon, Flat Door, 230 VAC, 50/60 Hz
CCL-240B-8-NF-FD	2170244	CelCulture® Incubator 240 L, IR Sensor, CO_2 Control, Moist Heat Decon, Flat Door, 230 VAC, 50/60 Hz, (No ULPA Filter)
CCL-050B-9-FD	2170191	CelCulture® Incubator 50 L, IR Sensor, CO_2 Control, Moist Heat Decon, Flat Door, 115 VAC, 50/60 Hz (Without Decon Pump)
CCL-170B-9-FD	2170120	CelCulture® Incubator 170 L, IR Sensor, CO_2 Control, ULPA, Moist Heat Decon, Flat Door, 115 VAC, 50/60 Hz
CCL-240B-9-FD	2170126	CelCulture® Incubator 240 L, IR Sensor, CO_2 Control, ULPA, Moist Heat Decon, Flat Door, 115 VAC, 50/60 Hz
CCL-170B-8-UV-FD	2170119	CelCulture® Incubator 170 L, IR Sensor, CO_2 Control, ULPA, UV Lamp, Moist Heat Decon, Flat Door, 230 VAC, 50/60Hz
CCL-170B-9-UV-FD	2170121	CelCulture® Incubator 170 L, IR Sensor, CO_2 Control, ULPA, UV Lamp, Moist Heat Decon, Flat Door, 115 VAC, 50/60 Hz
CCL-240B-8-UV-FD	2170124	CelCulture® Incubator 240 L, IR Sensor, CO_2 Control, ULPA, UV Lamp, Moist Heat Decon, Flat Door, 230 VAC, 50/60Hz
CCL-240B-9-UV-FD	2170360	CelCulture® Incubator 240 L, IR Sensor, CO_2 Control, ULPA, UV Lamp, Moist Heat Decon, Flat Door, 115 VAC, 50/60 Hz

SUPPRESSED O_2 MODEL WITH STAINLESS STEEL CHAMBER WITH FLAT DOOR DESIGN

MODELS	ITEM CODE	DESCRIPTION
CCL-050T-8-FD	2170149	CelCulture® Incubator 50 L, IR Sensor, CO_2 & O_2 Control, Moist Heat Decon, Flat Door, 230 VAC, 50/60 Hz (Without Decon Pump)
CCL-170T-8-FD	2170118	CelCulture® Incubator 170 L, IR Sensor, CO_2 & O_2 Control, ULPA, Moist Heat Decon, Flat Door, 230 VAC, 50/60 Hz
CCL-170T-8-NF-FD	2170247	CelCulture® Incubator 170 L, IR Sensor, CO_2 & O_2 Control, Moist Heat Decon, Flat Door, 230 VAC, 50/60 Hz (No ULPA Filter)
CCL-240T-8-FD	2170125	CelCulture® Incubator 240 L, IR Sensor, CO_2 & O_2 Control, ULPA, Moist Heat Decon, Flat Door, 230 VAC, 50/60 Hz
CCL-240T-8-NF-FD	2170249	CelCulture® Incubator 240 L, IR Sensor, CO_2 & O_2 Control, Moist Heat Decon, Flat Door, 230 VAC, 50/60 Hz (No ULPA Filter)
CCL-050T-9-FD	2170245	CelCulture® Incubator 50 L, IR Sensor, CO_2 & O_2 Control, Moist Heat Decon, Flat Door, 115 VAC, 50/60 Hz (Without Decon Pump)
CCL-170T-9-FD	2170148	CelCulture® Incubator 170 L, IR Sensor, CO_2 & O_2 Control, ULPA, Moist Heat Decon, Flat Door, 115 VAC, 50/60 Hz
CCL-240T-9-FD	2170127	CelCulture® Incubator 240 L, IR Sensor, CO_2 & O_2 Control, ULPA, Moist Heat Decon, Flat Door, 115 VAC, 50/60 Hz
CCL-170T-8-UV-FD	2170246	CelCulture® Incubator 170L, IR Sensor, CO_2 & O_2 Control, ULPA, UV Lamp, Moist Heat Decon, Flat Door, 230 VAC, 50/60 Hz
CCL-240T-8-UV-FD	2170248	Celculture® Incubator 240L, IR sensor, CO_2 & O_2 control, ULPA, UV Lamp, Moist Heat Decon, Flat Door, 230 VAC, 50/60 Hz

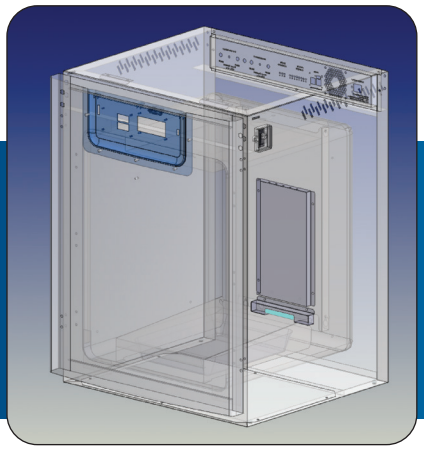

CelCulture®

CO_2 Incubator with UV Lamp

Ozone-free UV lamp decontaminates the water in the humidity pan and the circulating air that flows across the water surface. The UV lamp is isolated from the inner chamber by the plenum cover, ensuring the safety of cell cultures from the UV decontamination.

WITH STAINLESS STEEL CHAMBER

MODELS	ITEM CODE	DESCRIPTION
CCL-170B-8-UV	2170031	CelCulture® Incubator 170 L, IR Sensor, CO_2 Control, 90°C Moist Heat Decon, UV Lamp, 220 - 240 VAC, 50/60 Hz
CCL-170B-9-UV	2170052	CelCulture® Incubator 170 L, IR Sensor, CO_2 Control, 90°C Moist Heat Decon, UV Lamp, 110 - 130 VAC, 50/60 Hz
CCL-170T-8-UV	2170043	CelCulture® Incubator 170 L, IR Sensor, CO_2,O_2 Control, 90°C Moist Heat Decon, UV Lamp, 220 - 240 VAC, 50/60 Hz
CCL-170T-9-UV	2170044	CelCulture® Incubator 170 L, IR Sensor, CO_2,O_2 Control, 90°C Moist Heat Decon, UV Lamp, 110 - 130 VAC, 50/60 Hz
CCL-240B-8-UV	2170094	CelCulture® Incubator 240 L, IR Sensor, CO_2 Control, 90°C Moist Heat Decon, UV Lamp, 220 - 240 VAC, 50/60 Hz
CCL-240B-9-UV	2170096	CelCulture® Incubator 240 L, IR Sensor, CO_2 Control, 90°C Moist Heat Decon, UV Lamp, 110 - 130 VAC, 50/60 Hz
CCL-240T-8-UV	2170097	CelCulture® Incubator 240 L, IR Sensor, CO_2 & O_2 Control, 90°C Moist Heat Decon, UV Lamp, 220 - 240 VAC, 50/60 Hz
CCL-240T-9-UV	2170098	CelCulture® Incubator 240 L, IR Sensor, CO_2 & O_2 Control, 90°C Moist Heat Decon, UV Lamp, 110 - 130 VAC, 50/60 Hz

WITH COPPER CHAMBER

MODELS	ITEM CODE	DESCRIPTION
CCL-170B-8-Cu-UV	2170099	CelCulture® Incubator 170 L, IR Sensor, CO_2 Control, 90°C Moist Heat Decon, UV Lamp, 220 - 240 VAC, 50/60 Hz
CCL-170B-9-Cu-UV	2170285	CelCulture® Incubator 170 L, IR Sensor, CO_2 Control, 90°C Moist Heat Decon, UV Lamp, 110 - 130 VAC, 50/60 Hz
CCL-240B-8-Cu-UV	2170154	CelCulture® Incubator 240 L, IR Sensor, CO_2 Control, 90°C Moist Heat Decon, UV Lamp, 220 - 240 VAC, 50/60 Hz
CCL-240B-9-Cu-UV	2170286	CelCulture® Incubator 240 L, IR Sensor, CO_2 Control, 90°C Moist Heat Decon, UV Lamp, 110 - 130 VAC, 50/60 Hz
CCL-170T-8-Cu-UV	2170131	CelCulture® Incubator 170 L, IR Sensor, CO_2 & O_2 Control, 90°C Moist Heat Decon, UV Lamp, 220 - 240 VAC, 50/60 Hz
CCL-170T-9-Cu-UV	2170287	CelCulture® Incubator 170 L, IR Sensor, CO_2 & O_2 Control, 90°C Moist Heat Decon, UV Lamp, 110 - 130 VAC, 50/60 Hz
CCL-240T-8-Cu-UV	2170155	CelCulture® Incubator 240 L, IR Sensor, CO_2 & O_2 Control, 90°C Moist Heat Decon, UV Lamp, 220 - 240 VAC, 50/60 Hz
CCL-240T-9-Cu-UV	2170288	CelCulture® Incubator 240 L, IR Sensor, CO_2 & O_2 Control, 90°C Moist Heat Decon, UV Lamp, 110 - 130 VAC, 50/60 Hz

WITH PELTIER COOLING MODE

MODELS	ITEM CODE	DESCRIPTION
CCL-170B-8-P-UV	2170204	CelCulture® Incubator 170 L, IR Sensor, CO_2 Control, 90°C Moist Heat Decon, Peltier System, UV Lamp, 220 - 240 VAC, 50/60 Hz
CCL-170B-9-P-UV	2170205	CelCulture® Incubator 170 L, IR Sensor, CO_2 Control, 90°C Moist Heat Decon, Peltier System, UV Lamp, 110 - 130 VAC, 50/60 Hz
CCL-170T-8-P-UV	2170206	CelCulture® Incubator 170 L, IR Sensor, CO_2 & O_2 Control, 90°C Moist Heat Decon, Peltier System, UV Lamp, 220 - 240 VAC, 50/60 Hz
CCL-170T-9-P-UV	2170207	CelCulture® Incubator 170 L, IR Sensor, CO_2 & O_2 Control, 90°C Moist Heat Decon, Peltier System, UV Lamp, 110 - 130 VAC, 50/60 Hz
CCL-240B-7-P-UV	2170289	CelCulture® Incubator 240 L, IR Sensor, CO_2 Control, 90°C Moist Heat Decon, Peltier System, UV Lamp, 100 VAC, 50/60 Hz
CCL-240B-8-P-UV	2170208	CelCulture® Incubator 240 L, IR Sensor, CO_2 Control, 90°C Moist Heat Decon, Peltier System, UV Lamp, 220 - 240 VAC, 50/60 Hz
CCL-240B-9-P-UV	2170209	CelCulture® Incubator 240 L, IR Sensor, CO_2 Control, 90°C Moist Heat Decon, Peltier System, UV Lamp, 110 - 130 VAC, 50/60 Hz
CCL-240T-7-P-UV	2170262	CelCulture® Incubator 240 L, IR Sensor, CO_2 & O_2 Control, 90°C Moist Heat Decon, Peltier System, UV Lamp, 100 VAC, 50/60 Hz
CCL-240T-8-P-UV	2170210	CelCulture® Incubator 240 L, IR Sensor, CO_2 & O_2 Control, 90°C Moist Heat Decon, Peltier System, UV Lamp, 220 - 240 VAC, 50/60 Hz
CCL-240T-9-P-UV	2170211	CelCulture® Incubator 240 L, IR Sensor, CO_2 & O_2 Control, 90°C Moist Heat Decon, Peltier System, UV Lamp, 110 - 130 VAC, 50/60 Hz



CelCulture®

CO_2 Incubator with Copper Interior Chamber

Pure solid copper interior offers additional protection for your precious samples.

MAXIMUM CONTAMINATION CONTROL

Copper has been known for millennia to have antimicrobial properties. Copper can inhibit the growth of common culture microbial contaminants such as:

- *Escherichia coli*
- *Staphylococcus aureus*
- viruses

Other contamination control methods include:

- ✓ ULPA filter with 99.999% efficiency*
- ✓ 90°C Moist Heat Decontamination Cycle (HPA-Validated)
- ✓ 0.2 micron inlet filter for gas inputs
- ✓ Isocide™ antimicrobial powder coating

**Not available in 50 L model*

IR SENSOR MODEL WITH 100% COPPER CHAMBER

MODELS	ITEM CODE	DESCRIPTION
CCL-050B-8-Cu	2170081	CelCulture® Incubator 50 L, IR Sensor, CO_2 Control, Moist Heat Decon, 230 VAC, 50/60 Hz (Without Decon Pump)
CCL-170B-8-Cu	2170083	CelCulture® Incubator 170 L, IR Sensor, CO_2 Control, ULPA, Moist Heat Decon, 230 VAC, 50/60 Hz
CCL-170B-8-Cu-NF	2170351	CelCulture® Incubator 170 L, IR Sensor, CO_2 Control, Moist Heat Decon, 230 VAC, 50/60 Hz, (No ULPA Filter)
CCL-240B-8-Cu	2170085	CelCulture® Incubator 240 L, IR Sensor, CO_2 Control, ULPA, Moist Heat Decon, 230 VAC, 50/60 Hz
CCL-240B-8-Cu-NF	2170353	CelCulture® Incubator 240 L, IR Sensor, CO_2 Control, Moist Heat Decon, 230 VAC, 50/60 Hz, (No ULPA Filter)
CCL-050B-9-Cu	2170082	CelCulture® Incubator 50 L, IR Sensor, CO_2 Control, Moist Heat Decon, 115 VAC, 50/60 Hz (Without Decon Pump)
CCL-170B-9-Cu	2170084	CelCulture® Incubator 170 L, IR Sensor, CO_2 Control, ULPA, Moist Heat Decon, 115 VAC, 50/60 Hz
CCL-170B-9-Cu-NF	2170355	CelCulture® Incubator 170 L, IR Sensor, CO_2 Control, Moist Heat Decon, 115 VAC, 50/60 Hz, (No ULPA Filter)
CCL-240B-9-Cu	2170086	CelCulture® Incubator 240 L, IR Sensor, CO_2 Control, ULPA, Moist Heat Decon, 115 VAC, 50/60 Hz
CCL-240B-9-Cu-NF	2170357	CelCulture® Incubator 240 L, IR Sensor, CO_2 Control, Moist Heat Decon, 115 VAC, 50/60 Hz, (No ULPA Filter)

SUPPRESSED O_2 MODEL WITH COPPER CHAMBER

MODELS	ITEM CODE	DESCRIPTION
CCL-050T-8-Cu	2170087	CelCulture® Incubator 50 L, IR Sensor, CO_2 & O_2 Control, Moist Heat Decon, 230 VAC, 50/60 Hz (Without Decon Pump)
CCL-170T-8-Cu	2170089	CelCulture® Incubator 170 L, IR Sensor, CO_2 & O_2 Control, ULPA, Moist Heat Decon, 230 VAC, 50/60 Hz
CCL-170T-8-Cu-NF	2170352	CelCulture® Incubator 170 L, IR Sensor, CO_2 & O_2 Control, Moist Heat Decon, 230 VAC, 50/60 Hz, (No ULPA Filter)
CCL-240T-8-Cu	2170111	CelCulture® Incubator 240 L, IR Sensor, CO_2 & O_2 Control, ULPA, Moist Heat Decon, 230 VAC, 50/60 Hz
CCL-240T-8-Cu-NF	2170354	CelCulture® Incubator 240 L, IR Sensor, CO_2 & O_2 Control, Moist Heat Decon, 230 VAC, 50/60 Hz, (No ULPA Filter)
CCL-050T-9-Cu	2170088	CelCulture® Incubator 50 L, IR Sensor, CO_2 & O_2 Control, Moist Heat Decon, 115 VAC, 50/60 Hz (Without Decon Pump)
CCL-170T-9-Cu	2170090	CelCulture® Incubator 170 L, IR Sensor, CO_2 & O_2 Control, ULPA, Moist Heat Decon, 115 VAC, 50/60 Hz
CCL-170T-9-Cu-NF	2170356	CelCulture® Incubator 170 L, IR Sensor, CO_2 & O_2 Control, Moist Heat Decon, 115 VAC, 50/60 Hz, (No ULPA Filter)
CCL-240T-9-Cu	2170092	CelCulture® Incubator 240 L, IR Sensor, CO_2 & O_2 Control, ULPA, Moist Heat Decon, 115 VAC, 50/60 Hz
CCL-240T-9-Cu-NF	2170358	CelCulture® Incubator 240 L, IR Sensor, CO_2 & O_2 Control, Moist Heat Decon, 115 VAC, 50/60 Hz, (No ULPA Filter)



CelCulture®

CO_2 Incubator with Stainless Steel Exterior Cabinet

- Corrosion-resistant Surface
- Meets Pharmaceutical and Clinical Laboratory Requirements
- With new safety alarm system (temperature fail-safe system, watchdog system failure mode, and %CO_2 failure mode protection)

IR SENSOR MODEL WITH STAINLESS STEEL EXTERIOR CABINET

MODELS	ITEM CODE	DESCRIPTION
CCL-050B-8-SS	2170128	CelCulture® Incubator 50 L, IR Sensor, CO_2 Control, Moist Heat Decon, SS Cabinet, 230 VAC, 50/60 Hz (Without Decon Pump)
CCL-170B-8-SS	2170065	CelCulture® Incubator 170 L, IR Sensor, CO_2 Control, ULPA, Moist Heat Decon, SS Cabinet, 230 VAC, 50/60 Hz
CCL-240B-8-SS	2170137	CelCulture® Incubator 240 L, IR Sensor, CO_2 Control, ULPA, Moist Heat Decon, SS Cabinet, 230 VAC, 50/60 Hz
CCL-050B-9-SS	2170176	CelCulture® Incubator 50 L, IR sensor, CO_2 Control, Moist Heat Decon, SS Cabinet, 115 VAC, 50/60 Hz (Without Decon Pump)
CCL-170B-9-SS	2170177	CelCulture® Incubator 170 L, IR Sensor, CO_2 Control, ULPA, Moist Heat Decon, SS Cabinet, 115 VAC, 50/60 Hz
CCL-240B-9-SS	2170140	CelCulture® Incubator 240 L, IR Sensor, CO_2 Control, ULPA, Moist Heat Decon, SS Cabinet, 115 VAC, 50/60 Hz
CCL-170B-8-UV-SS	2170182	CelCulture® Incubator 170L, IR Sensor, CO_2 Control, ULPA, UV Lamp, Moist Heat Decon, SS Cabinet, 230 VAC, 50/60 Hz
CCL-240B-8-UV-SS	2170183	CelCulture® Incubator 240L, IR Sensor, CO_2 Control, ULPA, Moist Heat Decon, UV Lamp, SS Cabinet, 230 VAC, 50/60 Hz

SUPPRESSED O_2 MODEL WITH STAINLESS STEEL EXTERIOR CABINET

MODELS	ITEM CODE	DESCRIPTION
CCL-050T-8-SS	2170171	CelCulture® Incubator 50 L, IR Sensor, CO_2 & O_2 Control, Moist Heat Decon, SS Cabinet, 230 VAC, 50/60 Hz (Without Decon Pump)
CCL-170T-8-SS	2170129	CelCulture® Incubator 170 L IR Sensor, CO_2 & O_2 Control, ULPA, Moist Heat Decon, SS Cabinet, 230 VAC, 50/60 Hz
CCL-240T-8-SS	2170138	CelCulture® Incubator 240 L, IR Sensor, CO_2 & O_2 Control, ULPA, Moist Heat Decon, SS Cabinet, 230 VAC, 50/60 Hz
CCL-050T-9-SS	2170178	CelCulture® Incubator 50 L, IR Sensor, CO_2 & O_2 Control, Moist Heat Decon, SS Cabinet, 115 VAC, 50/60 Hz (Without Decon Pump)
CCL-170T-9-SS	2170179	CelCulture® Incubator 170 L, IR Sensor, CO_2 & O_2 Control, ULPA, Moist Heat Decon, SS Cabinet, 115 VAC, 50/60 Hz
CCL-240T-9-SS	2170141	CelCulture® Incubator 240 L, IR Sensor, CO_2 & O_2 Control, ULPA, Moist Heat Decon, SS Cabinet, 115 VAC, 50/60 Hz
CCL-170T-8-UV-SS	2170184	CelCulture® Incubator 170L, IR Sensor, CO_2 & O_2 Control, ULPA, UV Lamp, Moist Heat Decon, SS Cabinet, 230 VAC, 50/60 Hz
CCL-240T-8-UV-SS	2170185	CelCulture® Incubator 240L, IR Sensor, CO_2 & O_2 Control, ULPA, UV Lamp, Moist Heat Decon, SS Cabinet, 230 VAC, 50/60 Hz



CelCulture®

CO_2 Incubator for *In Vitro* Fertilization

The CO_2 Incubator has a vital role in providing an optimal environment in embryo development during IVF and other ART procedures.

Sleek, reliable, and intuitive, Esco CelCulture® CO_2 incubators for IVF are packed with outstanding features such as rapid parameter recovery, Isocide™ antimicrobial coating, standard Inner Door Kit feature that reduces contamination risk, and other accessories for specialized applications.



CCL-050_-_-IVF

KEY FEATURES

- Complete contamination control methods to protect your precious samples.
- All gas inputs are filtered via 0.2 micron inlet filter and has ULPA filtration system.
- 90°C moist heat decontamination cycle, validated by HPA-UK.
- With new safety alarm system (temperature fail-safe system, watchdog system failure mode, and %CO_2 failure mode protection)

IR SENSOR MODEL WITH STAINLESS STEEL CHAMBER

MODEL	ITEM CODE	DESCRIPTION
CCL-050B-8-IVF	2170257	Celculture® Incubator, 50 L, IR sensor, CO_2 control, Moist Heat Decon, with Sealed Inner Door Kit for 50 L (2 Glass Doors with Latches), Factory Installed, 230 VAC, 50/60 Hz
CCL-170B-8-IVF	2170272	CelCulture® Incubator 170 L IR Sensor, CO_2 Control ULPA, Moist Heat Decon, with Sealed Inner Door Kit for 170 L (4 Glass Doors with Latches), Factory Installed, 230 VAC 50/60 Hz
CCL-240B-8-IVF	2170278	CelCulture® Incubator 240 L IR Sensor CO_2 Control, ULPA, Moist Heat Decon, with Sealed Inner Door Kit for 240 L (4/6 Glass Doors with Latches), Factory Installed, 230 VAC 50/60 Hz
CCL-050B-9-IVF	2170258	Celculture® Incubator, 50 L, IR sensor, CO_2 control, Moist Heat Decon, with Sealed Inner Door Kit for 50 L (2 Glass Doors with Latches), Factory Installed, 115 VAC, 50/60 Hz
CCL-170B-9-IVF	2170273	CelCulture® Incubator 170 L IR Sensor, CO_2 Control ULPA, Moist Heat Decon, with Sealed Inner Door Kit for 170 L (4 Glass Doors with Latches), Factory Installed, 115 VAC 50/60 Hz
CCL-240B-9-IVF	2170279	CelCulture® Incubator 240 L, IR Sensor, CO_2 Control, ULPA, Moist Heat Decon with Sealed Inner Door Kit for 240 L (4/6 Glass Doors with Latches), Factory Installed, 115 VAC 50/60Hz

SUPPRESSED O_2 MODEL WITH STAINLESS STEEL CHAMBER

MODEL	ITEM CODE	DESCRIPTION
CCL-050T-8-IVF	2170260	Celculture® Incubator, 50 L, IR sensor, CO_2 & O_2 control, Moist Heat Decon, with Sealed Inner Door Kit for 50 L (2 Glass Doors with Latches), Factory Installed, 230 VAC, 50/60 Hz
CCL-170T-8-IVF	2170275	CelCulture® Incubator 170 L IR Sensor, CO_2 & O_2 Control ULPA, Moist Heat Decon, with Sealed Inner Door Kit for 170 L (4 Glass Doors with Latches), Factory Installed, 230 AC 50/60 Hz
CCL-240T-8-IVF	2170281	Celculture® Incubator, 240 L, IR sensor, CO_2 & O_2 control, Moist Heat Decon, with Sealed Inner Door Kit for 240 L (4/6 Glass Doors with Latches), Factory Installed, 230 VAC 50/60 Hz
CCL-050T-9-IVF	2170261	Celculture® Incubator, 50 L, IR sensor, CO_2 & O_2 control, Moist Heat Decon, with Sealed Inner Door Kit for 50 L (2 Glass Doors with Latches), Factory Installed, 115 VAC, 50/60 Hz
CCL-170T-9-IVF	2170276	CelCulture® Incubator 170 L IR Sensor, CO_2 & O_2 Control ULPA, Moist Heat Decon, with Sealed Inner Door Kit for 170 L (4 Glass Doors with Latches), Factory Installed, 115 VAC 50/60 Hz
CCL-240T-9-IVF	2170282	Celculture® Incubator, 240 L, IR sensor, CO_2 & O_2 control, Moist Heat Decon, with Sealed Inner Door Kit for 240 L (4/6 Glass Doors with Latches), Factory Installed, 115 VAC 50/60 Hz

TECHNICAL SPECIFICATIONS

CelCulture® CO_2 Incubator, Standard, CelCulture® CO_2 Incubator with Suppressed O_2, CelCulture® CO_2 Incubator with UV Lamp, CelCulture® CO_2 Incubator with Copper Interior Chamber, CelCulture® CO_2 Incubator with Stainless Steel Exterior, and CelCulture® CO_2 Incubator for *In Vitro* Fertilization

MODEL 50 L

Front view

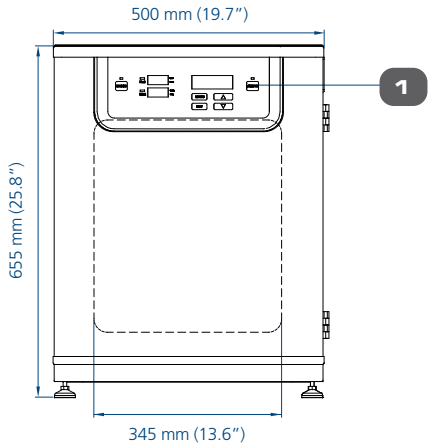

Side view

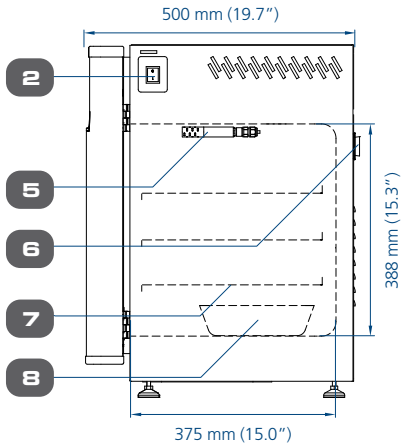

Rear view

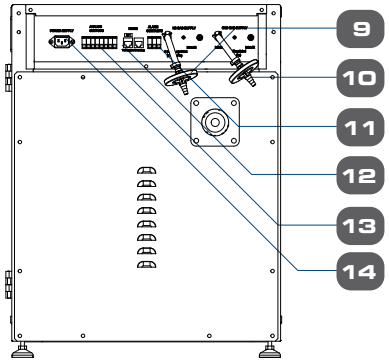

MODEL 170 L

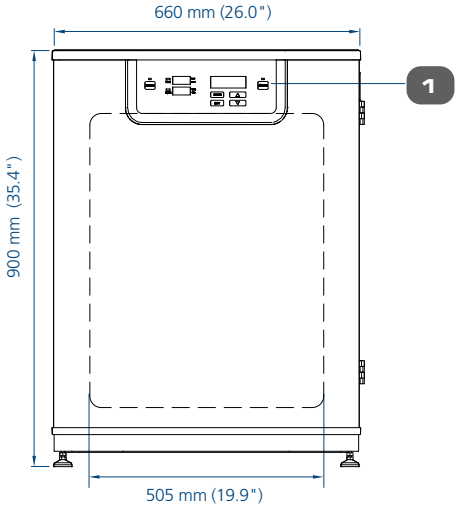

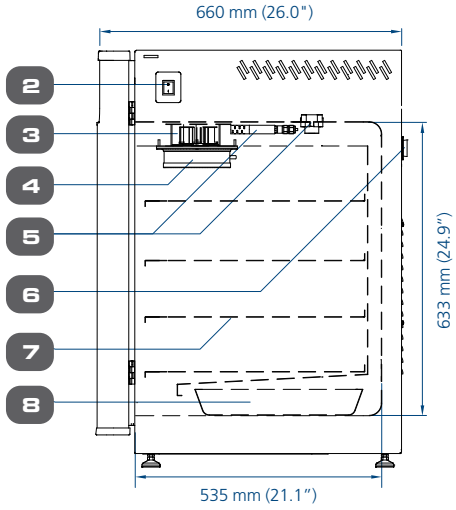

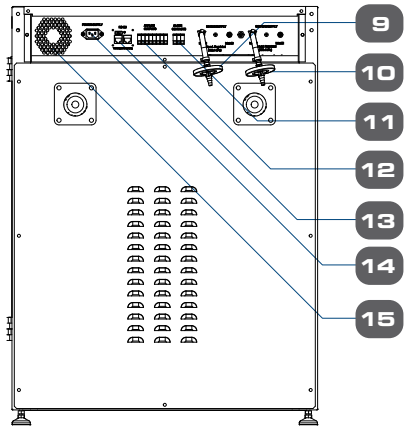

MODEL 240 L

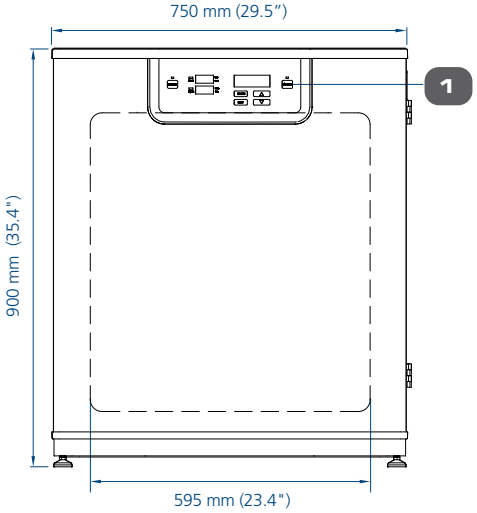

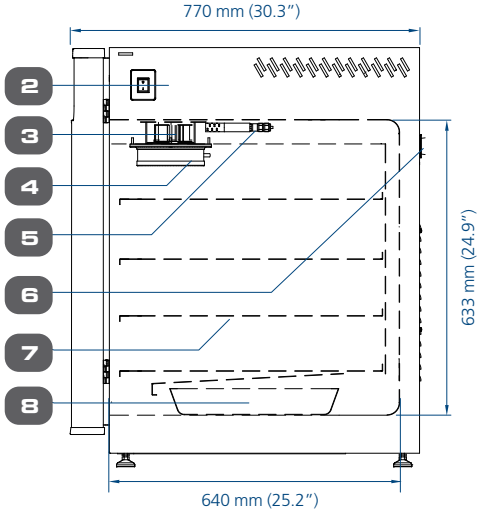

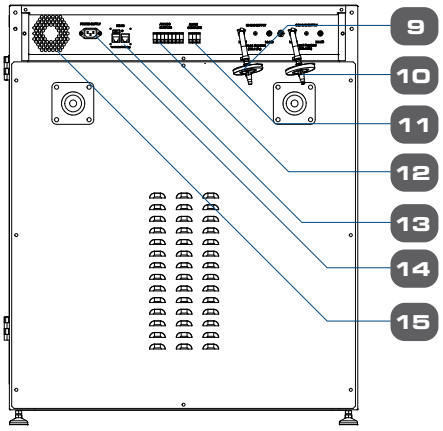

1. Control panel
2. On / off switch
3. Blower fan
4. ULPA filter
5. Sensors
6. Access port
7. Adjustable shelves
8. Water pan with cover
9. N_2 gas supply
10. CO_2 gas supply
11. Alarm contact
12. Analog output
13. RS485
14. Power supply inlet
15. Cooling fan

GENERAL SPECIFICATIONS

MODELS	CelCulture® CO_2 Incubator, Standard	CCL-050B-_	CCL-170B-_	CCL-240B-_
	CelCulture® CO_2 Incubator, Tri-gas (Suppressed O_2)	CCL-050T-_	CCL-170T-_	CCL-240T-_
	CelCulture® CO_2 Incubator with UV Lamp		CCL-170_-_-UV	CCL-240_-_-UV
	CelCulture® CO_2 Incubator with Copper Interior Chamber	CCL-050_-_-Cu	CCL-170_-_-Cu	CCL-240_-_-Cu
	CelCulture® CO_2 Incubator with Stainless Steel Exterior	CCL-050_-_-SS	CCL-170_-_-SS	CCL-240_-_-SS
	CelCulture® CO_2 Incubator for *In Vitro* Fertilization	CCL-050_-_-IVF	CCL-170_-_-IVF	CCL-240_-_-IVF
TEMPERATURE				
Temperature Control Method		Direct heat & Air Jacket using Microcontroller PI		
Ambient Temperature Range*		18 to 32°C (64.4 to 89.6°F)		
Temperature Range, °C*		Ambient +5 to 60		
Temperature Uniformity, °C*		< ±0.5		
Temperature Accuracy, °C*		< ±0.1		
Temperature Recovery Time** (after 30 seconds door opening, 98% from initial value)		≤5 minutes	≤5 minutes	≤6 minutes
CO_2				
CO_2 Control System		Microcontroller PI		
CO_2 Range, % CO_2		0-19.5		
CO_2 Accuracy, % CO_2***		±0.1		
CO_2 Sensor		Infrared (IR) Sensor		
CO_2 Recovery Time**** (after 30 seconds door opening, 98% from initial value)		Standard Unit: ≤6 minutes Suppressed O_2 model: ≤8 minutes	Standard Unit: ≤5 minutes Suppressed O_2 model: ≤6 minutes	Standard Unit: ≤6 minutes Suppressed O_2 model: ≤10 minutes
O_2/T-SERIES (FOR SUPPRESSED O_2 MODEL)				
O_2 Control System		Microcontroller PI		
O_2 Range, % O_2		1-18		
O_2 Accuracy, % O_2*****		± 0.1		
O_2 Sensor		Zirconia O_2 sensor		
HUMIDITY				
Humidification Method		Humidity pan		
Humidity Range, %RH (at 37 °C)*******		85-90		
PHYSICAL CONSTRUCTION				
Interior Volume		50 L (1.8 ft^3)	170 L (6 ft^3)	240 L (8.5 ft^3)
External Dimensions (W x D x H)		500 x 500 x 655 mm (19.7" x 19.7" x 25.8")	660 x 660 x 900 mm (26.0" x 26.0" x 35.4")	750 x 770 x 900 mm (29.5" x 30.3" x 35.4")
Internal Dimensions (W x D x H)		345 x 375 x 388 mm (13.6" x 14.8" x 15.3")	505 x 535 x 633 mm (19.9" x 21.1" x 24.9")	595 x 640 x 633 mm (23.4" x 25.2" x 24.9")
Chamber Construction	Main Body	Electrogalvanized steel with Isocide™ antimicrobial coating (except CCL-SS models with stainless steel exterior)		
	Interior Material	Stainless steel, type 304 (except CCL-Cu models with copper interior chamber)		
	Number of Shelves	3 (2 for CCL-IVF models)	4	4
	Maximum Number of Shelves	4	7	7
	Shelves Dimensions (W x D x H)	305 x 340 x 16 mm (12.0" x 13.39" x 0.63")	470 x 476 x 16 mm (18.5" x 18.75" x 0.63")	560 x 585 x 16 mm (22.0" x 23.9" x 0.63")
	Maximum Load per Shelf	4 kg/shelf (8.8 lbs/shelf)	11 kg/shelf (24.3 lbs/shelf)	15 kg/shelf (33.1 lbs/shelf)
Electrical Configuration 110-130 VAC, 50/60 Hz	Nominal Power at 37°C	40.9 W	42.2 W	42.2 W
	Maximum Power Consumption	675.5 W	1184.3 W	1727.9 W
	Full Load Amps	5.3 A	9.2 A	13.4 A
Electrical Configuration 220-240 VAC, 50/60 Hz	Nominal Power at 37°C	40.9 W	42.2 W	42.2 W
	Maximum Power Consumption	598.8 W	1008.9 W	1270 W
	Full Load Amps	2.5 A	4.2 A	6.5 A
Net Weight		52 kg (114.6 lbs)	101 kg (222.7 lbs)	121 kg (266.8 lbs)
Shipping Weight		70 kg (154.3 lbs)	120 kg (264.6 lbs)	155 kg (341.7 lbs)
Shipping Dimensions (W x D x H)		660 x 650 x 900 mm (26.0" x 25.6" x 35.4")	850 x 720 x 1120 mm (33.5" x 28.3" x 44.1")	850 x 850 x 1120 mm (33.5" x 33.5" x 44.1")
Shipping Volume		0.39 m^3 (13.7 ft^3)	0.70 m^3 (24.85 ft^3)	0.79 m^3 (28.03 ft^3)
CONTAMINATION CONTROL				
Contamination Control Methods		1) Main body is electro-galvanized steel with Isocide™ antimicrobial coating; 2) 90°C moist heat OVERNIGHT decontamination cycle (HPA validated); 3) ULPA filter******** 4) 0.2-micron inlet filter for gas inputs; 5) 1-micron air circulation filter 6) UV lamp (for CCL-UV models only) 7) Copper chamber interior (for CCL-Cu models only)		

All data recorded is specified for standard models with unloaded chambers and tested under optimum factory setting conditions of 23°C and 60% ambient humidity.
**Results are achieved when tested at 37°C as set point. Results may vary if set point changes and calibration is needed.*
***For temperature not exceeding 37.2°C.*
****Results are achieved when tested at 5% CO_2 as set point. Results may vary if set point changes and calibration is needed.*
*****For CO_2 level not exceeding 5.2%.*
******Results are achieved when tested at 5% O_2 as set point. Results may vary if set point changes and calibration is needed.*
******* For O_2 level not lower than 4.8%.*
********Esco does not guarantee condensation-free chamber at humidity level higher than 90%.*
*********Not available for 50 L models.*



CelCulture®

CO_2 Incubator with Integrated Cooling System

Esco CelCulture® CO_2 Incubator with Integrated Cooling System provides solution for highly specialized applications.

The integrated cooling system allows studies of samples that requires temperature at/or below ambient temperature.

KEY FEATURES

WIDER TEMPERATURE RANGE

Temperature range of 8°C below ambient to 60°C means wider range of applications.

HIGHLY EFFICIENT, ENVIRONMENT FRIENDLY PELTIER COOLING SYSTEM

This provides precise heating and cooling inside the chamber making sure that your samples are safe from temperature changes.

COMPLETE CONTAMINATION CONTROL METHODS

- 90°C validated moist heat decontamination cycle
- ULPA filter
- Isocide™ antimicrobial coating
- 0.2 micron inlet filter for gas inputs

NEW SAFETY ALARM SYSTEM

- Temperature fail-safe system
- Watchdog system failure mode
- %CO_2 failure mode protection

IR SENSOR MODEL WITH INTEGRATED COOLING SYSTEM

MODELS	ITEM CODE	DESCRIPTION
CCL-170B-8-P	2170101	CelCulture® Incubator 170 L, IR Sensor, CO_2 Control, Moist Heat Decon, Peltier System, 230 VAC, 50/60 Hz
CCL-170B-9-P	2170115	CelCulture® Incubator 170 L, IR Sensor, CO_2 Control, Moist Heat Decon, Peltier System, 115 VAC, 50/60 Hz
CCL-240B-8-P	2170116	CelCulture® Incubator 240 L, IR Sensor, CO_2 Control, Moist Heat Decon, Peltier System, 230 VAC, 50/60 Hz
CCL-240B-9-P	2170266	CelCulture® Incubator 240 L, IR Sensor, CO_2 Control, Moist Heat Decon, Peltier System, 115 VAC, 50/60 Hz

SUPPRESSED O_2 MODEL WITH INTEGRATED COOLING SYSTEM

MODELS	ITEM CODE	DESCRIPTION
CCL-170T-8-P	2170112	CelCulture® Incubator 170 L, IR Sensor, CO_2 & O_2 Control, Moist Heat Decon, Peltier System, 230 VAC, 50/60 Hz
CCL-170T-9-P	2170153	CelCulture® Incubator 170 L, IR Sensor, CO_2 & O_2 Control, Moist Heat Decon, Peltier System, 115 VAC, 50/60 Hz
CCL-240T-8-P	2170267	CelCulture® Incubator 240 L, IR Sensor, CO_2 & O_2 Control, Moist Heat Decon, Peltier System, 230 VAC, 50/60 Hz
CCL-240T-9-P	2170268	CelCulture® Incubator 240 L, IR Sensor, CO_2 & O_2 Control, Moist Heat Decon, Peltier System, 115 VAC, 50/60 Hz

GENERAL SPECIFICATIONS

CELCULTURE® CO_2 INCUBATOR WITH INTEGRATED COOLING SYSTEM

MODEL		CCL-170_-_-P	CCL-240_-_-P
TEMPERATURE			
Temperature Control Method		Direct heat & Air Jacket using Microcontroller PI	
Ambient Temperature Range		18 to 32°C (64.4 to 89.6°F)	
Temperature Range, °C		8°C below ambient to 60°C	
Temperature Uniformity, °C*		Heating mode: < ±0.7 Cooling mode: < ±2.0	
Temperature Accuracy, °C*		< ±0.1	
Temperature Recovery Time** (after 30 seconds door opening, 98% from initial value)		≤5 minutes	≤6 minutes
CO_2			
CO_2 Control System		Microcontroller PI	
CO_2 Range, % CO_2		0-19.5	
CO_2 Accuracy, % CO_2***		±0.1	
CO_2 Sensor		Infrared (IR) Sensor	
CO_2 Recovery Time**** (after 30 seconds door opening, 98% from initial value)		Standard Unit: ≤5 minutes Suppressed O_2 model: ≤6 minutes	Standard Unit: ≤6 minutes Suppressed O_2 model: ≤10 minutes
O_2/T-SERIES (FOR SUPPRESSED O_2 MODEL)			
O_2 Control System		Microcontroller PI	
O_2 Range, % O_2		0-18	
O_2 Accuracy, % O_2*****		± 0.1	
O_2 Sensor		Zirconia O_2 sensor	
HUMIDITY			
Humidity Method		Humidity Pan	
Humidity Range, %RH (at 37°C)*******		85-90	
PHYSICAL CONSTRUCTION			
Interior Volume		170 L (6 ft³)	240 L (8.5 ft³)
External Dimensions (W x D x H)		660 x 789 x 900 mm (26.0" x 31.0" x 35.4")	750 x 904 x 900 mm (29.5" x 35.6" x 35.4")
Internal Dimensions (W x D x H)		505 x 535 x 633 mm (19.9" x 21.1" x 24.9")	595 x 640 x 633 mm (23.4" x 25.2" x 24.9")
Chamber Construction	Main Body	Electrogalvanized steel with Isocide™ antimicrobial coating	
	Interior Material	Stainless steel, type 304	
	Number of Shelves	4	4
	Maximum Number of Shelves	7	7
	Shelves Dimensions (W x D x H)	470 x 476 x 16 mm (18.5" x 18.75" x 0.63")	560 x 585 x 16 mm (22.0" x 23.9" x 0.63")
	Maximum Load per Shelf	11 kg/shelf (24.3 lbs/shelf)	15 kg/shelf (33.1 lbs/shelf)
Electrical Configuration 110-130 VAC, 50/60 Hz	Nominal Power at 37°C	42.2 W	42.2 W
	Maximum Power Consumption	1184.3 W	1727.9 W
	Full Load Amps	9.2 A	13.4 A
Electrical Configuration 220-240 VAC, 50/60 Hz	Nominal Power at 37°C	42.2 W	42.2 W
	Maximum Power Consumption	1008.9 W	1270 W
	Full Load Amps	4.2 A	6.5 A
Net Weight		113 kg (249.1 lbs)	133 kg (293.2 lbs)
Shipping Weight		139 kg (306.4 lbs)	174 kg (383.6 lbs)
Shipping Dimensions (W x D x H)		850 x 900 x 1120 mm (33.5" x 35.4" x 44.1")	850 x 990 x 1120 mm (33.5" x 39.0" x 44.1")
Shipping Volume		0.70 m³ (24.85 ft³)	0.79 m³ (28.03 ft³)
CONTAMINATION CONTROL			
Contamination Control Methods		1) Main body is electro-galvanized steel with Isocide™ antimicrobial coating; 2) 90°C moist heat OVERNIGHT decontamination cycle (HPA validated); 3) ULPA filter******** 4) 0.2-micron inlet filter for gas inputs; 5) 1-micron air circulation filter	

All data recorded is specified for standard models with unloaded chambers and tested under optimum factory setting conditions of 23°C and 60% ambient humidity.
**Results are achieved when tested at 37°C as set point. Results may vary if set point changes and calibration is needed.*
***For temperature not exceeding 37.2°C.*
****Results are achieved when tested at 5% CO_2 as set point. Results may vary if set point changes and calibration is needed.*
*****For CO_2 level not exceeding 5.2%.*
******Results are achieved when tested at 5% O_2 as set point. Results may vary if set point changes and calibration is needed.*
******* For O_2 level not lower than 4.8%.*
******** Esco does not guarantee condensation-free chamber at humidity level higher than 90%.*



CelCulture®

CO_2 Incubator with High-Temperature CO_2 Sensor

Introducing CelCulture® CO_2 Incubator with High-Temperature CO_2 Sensor, offering excellent temperature uniformity throughout the chamber and reliable CO_2 measurement for optimal growth of cells and tissues. CO_2 sensor installed provides hassle-free operation as it can withstand high temperature during decontamination cycle without the need to remove it from the chamber.

KEY FEATURES

COMPLETE CONTAMINATION CONTROL METHODS

- 90 °C validated moist heat decontamination cycle
- ULPA filter
- Isocide™ anti-microbial coating
- 0.2 micron inlet filter for gas inputs

HIGH-TEMPERATURE CO_2 SENSOR

Maintenance-free CO_2 sensor is to be included during decontamination cycle.

TEMPERATURE FAIL-SAFE SYSTEM

Over-temperature protection device prevents overshooting of temperature display to + 0.4°C of the set point.

WATCHDOG SYSTEM FAILURE MODE

The auto-reset watchdog will automatically reset the system in the unlikely event of system failure, preventing the controller from freezing.

%CO_2 FAILURE MODE PROTECTION

Prevents build-up of %CO_2 over set point in cases of CO_2 sensor defect.

IR SENSOR MODEL WITH STAINLESS STEEL CHAMBER

MODEL	ITEM CODE	DESCRIPTION
CCL-170B-8-HITEMP	2170340	CelCulture® Incubator 170 L, IR Sensor, CO_2 Control, ULPA, Moist Heat Decon, 230 VAC, 50/60 Hz
CCL-240B-8-HITEMP	2170324	CelCulture® Incubator 240 L, IR Sensor, CO_2 Control, ULPA, Moist Heat Decon, 230 VAC, 50/60 Hz
CCL-170B-8-IVF-HITEMP	2170328	CelCulture® Incubator 170L, IR Sensor, CO_2 Control ULPA, Moist Heat Decon, with Sealed Inner Door Kit for 170L (4 Glass Doors with Latches), Factory Installed, 230 VAC 50/60Hz
CCL-240B-8-IVF-HITEMP	2170330	CelCulture® Incubator 240L, IR Sensor, CO_2 Control ULPA, Moist Heat Decon, with Sealed Inner Door Kit for 240L (4/6 Glass Doors with Latches), Factory Installed, 230 VAC 50/60Hz

SUPPRESSED O_2 MODEL WITH STAINLESS STEEL CHAMBER

MODEL	ITEM CODE	DESCRIPTION
CCL-170T-8-HITEMP	2170323	CelCulture® Incubator 170 L, IR Sensor, CO_2 & O_2 Control, ULPA, Moist Heat Decon, 230 VAC, 50/60 Hz
CCL-240T-8-HITEMP	2170325	CelCulture® Incubator 240 L, IR Sensor, CO_2 & O_2 Control, ULPA, Moist Heat Decon, 230 VAC, 50/60 Hz
CCL-170T-8-IVF-HITEMP	2170329	CelCulture® Incubator 170L, IR Sensor, CO_2 & O_2 Control ULPA, Moist Heat Decon, with Sealed Inner Door Kit for 170L (4/6 Glass Doors with Latches), Factory Installed, 230 VAC 50/60Hz
CCL-240T-8-IVF-HITEMP	2170331	CelCulture® Incubator 240L, IR Sensor, CO_2 & O_2 Control ULPA, Moist Heat Decon, with Sealed Inner Door Kit for 240L (4/6 Glass Doors with Latches), Factory Installed, 230 VAC 50/60Hz

GENERAL SPECIFICATIONS

CELCULTURE® CO_2 INCUBATOR WITH HIGH-TEMPERATURE CO_2 SENSOR

MODEL		CCL-170_-_-HITEMP	CCL-240_-_-HITEMP
TEMPERATURE			
Temperature Control Method		Direct Heat and Air Jacket Using Microcontroller PI	
Ambient Temperature Range*		18 to 32°C (64.4 to 89.6°F)	
Temperature Control Range, °C*		Ambient +5 to 60	
Temperature Uniformity, °C*		Standard Unit: <± 0.35 Suppressed O_2 model: <± 0.4	<± 0.5
Temperature Fluctuation, °C*		<± 0.2	
Temperature Recovery Time** (after 30 seconds door opening, 98% from initial value)		≤5 minutes	≤6 minutes
CO_2			
CO_2 Control System		Microcontroller PI	
CO_2 Control Range, % CO_2		0-19.5	
CO_2 Fluctuation, % CO_2***		± 0.2	
CO_2 Sensor		Infrared (IR) Sensor	
CO_2 Recovery Time**** (after 30 seconds door opening, 98% from initial value)		Standard Unit: ≤5 minutes Suppressed O_2 model: ≤8 minutes	Standard Unit: ≤5 minutes Suppressed O_2 model: ≤8 minutes
O_2 (FOR MODELS WITH SUPPRESSED O_2 CONTROL)			
O_2 Control System		Microcontroller PI	
O_2 Control Range, % O_2		1-18	
O_2 Fluctuation, % O_2*****		± 0.3	
O_2 Sensor		Zirconium dioxide sensor type	
HUMIDITY			
Humidification Method		Humidity Pan	
Humidity Range, %RH (at 37 °C)*******		85-90	
PHYSICAL CONSTRUCTION			
Interior Volume		170 L (6 ft^3)	240 L (8.5 ft^3)
External Dimensions (W x D x H)		660 x 660 x 906 mm (26.0" x 26.0" x 35.6")	750 x 770 x 906 mm (29.5" x 30.3" x 35.6")
Internal Dimensions (W x D x H)		505 x 535 x 633 mm (19.9" x 21.1" x 24.9")	595 x 640 x 633 mm (23.4" x 25.2" x 24.9")
Chamber Construction	Main Body	Electrogalvanized steel with Isocide™ antimicrobial coating	
	Interior Material	Stainless steel, type 304	
	Number of Shelves	4	4
	Maximum Number of Shelves	7	7
	Shelves Dimensions (W x D x H)	470 x 476 x 16 mm (18.5" x 18.75" x 0.63")	560 x 585 x 16 mm (22.0" x 23.9" x 0.63")
	Maximum Load per Shelf	11 kg/shelf (24.3 lbs/shelf)	15 kg/shelf (33.1 lbs/shelf)
Electrical Configuration 220-240 VAC, 50/60 Hz	Nominal Power at 37°C	42.2 W	42.2 W
	Maximum Power Consumption	1008.9 W	1270 W
	Full Load Amps	4.2 A	6.5 A
Net Weight		101 kg (222.7 lbs)	121 kg (266.8 lbs)
Shipping Weight		120 kg (264.6 lbs)	155 kg (341.7 lbs)
Shipping Dimensions (W x D x H)		850 x 720 x 1120 mm (33.5" x 28.3" x 44.1")	850 x 850 x 1120 mm (33.5" x 33.5" x 44.1")
Shipping Volume		0.70 m^3 (24.85 ft^3)	0.79 m^3 (28.03 ft^3)
CONTAMINATION CONTROL			
Contamination Control Methods		1) Main body is electro-galvanized steel with Isocide™ antimicrobial coating; 2) 90°C moist heat OVERNIGHT decontamination cycle (HPA validated); 3) ULPA filter 4) 0.2-micron inlet filter for gas inputs; 5) 1-micron air circulation filter	

All data recorded is specified for standard models with unloaded chambers and tested under optimum factory setting conditions of 23°C and 60% ambient humidity.
**Results are achieved when tested at 37°C as set point. Results may vary if set point changes and calibration is needed.*
***For temperature not exceeding 37.2°C.*
****Results are achieved when tested at 5% CO_2 as set point. Results may vary if set point changes and calibration is needed.*
*****For CO_2 level not exceeding 5.2%.*
******Results are achieved when tested at 5% O_2 as set point. Results may vary if set point changes and calibration is needed.*
******* For O_2 level not lower than 4.8%.*
******** Esco does not guarantee condensation-free chamber at humidity level higher than 90%.*



CelCulture®

CO_2 Incubator with High Heat Sterilization

Introducing Esco's CelCulture® CO_2 Incubator with 180°C High Heat Sterilization Cycle, offering efficient contamination protection and hassle-free maintenance without compromising accuracy and reliability in maintaining optimal conditions for cell growth.



KEY FEATURES

180°C HIGH HEAT STERILIZATION

Quick and hassle-free elimination of contaminants in the chamber and its interior components.

HEAT-RESISTANT SENSORS

Maintenance-free sensors are to be included during sterilization.

TEMPERATURE FAIL-SAFE SYSTEM

Over-temperature protection device prevents overshooting of temperature display to +0.4°C of the set point.

WATCHDOG SYSTEM-FAILURE MODE

The auto-reset watchdog will automatically reset the system in the unlikely event of system failure, preventing the controller from freezing.

%CO_2 FAILURE MODE PROTECTION

Prevents build-up of %CO_2 over set point in cases of CO_2 sensor defect. The system will automatically stop the valve from injecting CO_2 after a certain period.

IR SENSOR MODEL WITH STAINLESS STEEL CHAMBER

MODEL	ITEM CODE	DESCRIPTION
CCL-170B-8-HHS	2170295	CelCulture® Incubator 170 L IR Sensor, CO_2 Control, ULPA, 180°C HHS, 230 VAC 50/60 Hz
CCL-240B-8-HHS	2170270	CelCulture® Incubator 240 L IR Sensor, CO_2 Control, ULPA, 180°C HHS, 230 VAC 50/60 Hz
CCL-170B-9-HHS	2170303	CelCulture® Incubator 170 L IR Sensor, CO_2 Control, ULPA, 180°C HHS, 115 VAC 50/60 Hz
CCL-240B-9-HHS	2170304	CelCulture® Incubator 240 L IR Sensor, CO_2 Control, ULPA, 180°C HHS, 115 VAC 50/60 Hz

SUPPRESSED O_2 MODEL WITH STAINLESS STEEL CHAMBER

MODEL	ITEM CODE	DESCRIPTION
CCL-170T-8-HHS	2170297	CelCulture® Incubator 170L IR Sensor, CO_2/O_2 Control, ULPA, 180°C HHS, 230 VAC 50/60 Hz
CCL-240T-8-HHS	2170300	CelCulture® Incubator 240L IR Sensor, CO_2/O_2 Control, ULPA, 180°C HHS, 230 VAC 50/60 Hz
CCL-170T-9-HHS	2170307	CelCulture® Incubator 170L IR Sensor, CO_2/O_2 Control, ULPA, 180°C HHS, 115 VAC 50/60 Hz
CCL-240T-9-HHS	2170308	CelCulture® Incubator 240L IR Sensor, CO_2/O_2 Control, ULPA, 180°C HHS, 115 VAC 50/60 Hz

IR SENSOR MODEL WITH STAINLESS STEEL CHAMBER (NO ULPA FILTER)

MODEL	ITEM CODE	DESCRIPTION
CCL-170B-8-NF-HHS	2170298	CelCulture® Incubator 170 L IR Sensor, CO_2 Control, 180°C HHS, 230 VAC 50/60 Hz, No ULPA Filter
CCL-240B-8-NF-HHS	2170299	CelCulture® Incubator 240 L IR Sensor, CO_2 Control, 180°C HHS, 230 VAC 50/60 Hz, No ULPA Filter
CCL-170B-9-NF-HHS	2170305	CelCulture® Incubator 170 L IR Sensor, CO_2 Control, 180°C HHS, 115 VAC 50/60 Hz, No ULPA Filter
CCL-240B-9-NF-HHS	2170306	CelCulture® Incubator 240 L IR Sensor, CO_2 Control, 180°C HHS, 115 VAC 50/60 Hz, No ULPA Filter

SUPPRESSED O_2 MODEL WITH STAINLESS STEEL CHAMBER (NO ULPA FILTER)

MODEL	ITEM CODE	DESCRIPTION
CCL-170T-8-NF-HHS	2170301	CelCulture® Incubator 170 L IR Sensor, CO_2/O_2 Control, 180°C HHS, 230 VAC 50/60 Hz, No ULPA Filter
CCL-240T-8-NF-HHS	2170302	CelCulture® Incubator 240 L IR Sensor, CO_2/O_2 Control, 180°C HHS, 230 VAC 50/60 Hz, No ULPA Filter
CCL-170T-9-NF-HHS	2170309	CelCulture® Incubator 170 L IR Sensor, CO_2/O_2 Control, 180°C HHS, 115 VAC 50/60 Hz, No ULPA Filter
CCL-240T-9-NF-HHS	2170310	CelCulture® Incubator 240 L IR Sensor, CO_2/O_2 Control, 180°C HHS, 115 VAC 50/60 Hz, No ULPA Filter

GENERAL SPECIFICATIONS

CELCULTURE® CO_2 INCUBATOR WITH HIGH HEAT STERILIZATION

MODEL		CCL-170_-_-HHS	CCL-240_-_-HHS
TEMPERATURE			
Temperature Control Method		Direct Heat and Air Jacket using Microcontroller PI	
Ambient Temperature Range		18 to 32°C (64.4 to 89.6°F)	
Temperature Control Range, °C		Ambient +5 to 60	
Temperature Uniformity, °C *		Standard Unit: <± 0.35 Suppressed O_2 model: <± 0.4	
Temperature Fluctuation, °C *		±0.2	
Temperature Recovery Time** (after 30 seconds door opening, 98% from initial value)		≤5 minutes	
CO_2			
CO_2 Control System		Microcontroller PI	
CO_2 Control Range, % CO_2		0-19.5	
CO_2 Fluctuation, % CO_2***		± 0.2	± 0.3
CO_2 Sensor		Infrared (IR) Sensor	
CO_2 Recovery Time**** (after 30 seconds door opening, 98% from initial value)		At 5.0% CO_2 by volume (Standard unit): ≤5 minutes Suppressed O_2 model: ≤8 mins.	At 5.0% CO_2 by volume (Standard unit): ≤5 minutes Suppressed O_2 model: ≤8 mins.
O_2			
O_2 Control System		Microcontroller PI	
O_2 Control Range, % O_2		1-18	
O_2 Fluctuation, % O_2*****		± 0.3	
O_2 Sensor		Zirconia O_2 Sensor	
HUMIDITY			
Humidification Method		Humidity pan	
Humidity Range, %RH (at 37°C)*******		85-90	
PHYSICAL CONSTRUCTION			
Interior Volume		170 L (6 ft³)	240 L (8.5 ft³)
External Dimensions (W x D x H)		660 x 660 x 906 mm (26.0" x 26.0" x 35.6")	750 x 770 x 906 mm (29.5" x 30.3" x 35.6")
Internal Dimensions (W x D x H)		505 x 535 x 633 mm (19.9" x 21.1" x 24.9")	595 x 640 x 633 mm (23.4" x 25.2" x 24.9")
Net Weight		101 kg (222.7 lbs.)	121 kg (266.8 lbs.)
Chamber Construction	Main Body	Electrogalvanized steel with Isocide™ antimicrobial coating	
	Interior Material	Stainless steel, type 304	
	Number of Shelves	4	
	Maximum Number of Shelves	7	
	Shelves Dimensions (W x D x H)	470 x 476 x 16 mm (18.5" x 18.75" x 0.63")	560 x 585 x 16 mm (22.0" x 23.9" x 0.63")
	Maximum Load per Shelf	11 kg/shelf (24.3 lbs./shelf)	15 kg/shelf (33.1 lbs./shelf)
Electrical Configuration 110-130 VAC, 50/60 Hz	Nominal Power at 37°C	42.2 W	42.2 W
	Maximum Power Consumption	1400 W	1770 W
	Full Load Amps	10 A	14 A
Electrical Configuration 220-240 VAC, 50/60 Hz	Nominal Power at 37°C	42.2 W	42.2 W
	Maximum Power Consumption	1300 W	1500 W
	Full Load Amps	5 A	7 A
Shipping Weight		140 kg (308.6 lbs)	160 kg (352.7 lbs)
Shipping Dimensions (W x D x H)		850 x 720 x 1120 mm (33.5" x 28.3" x 44.1")	850 x 850 x 1120 mm (33.5" x 33.5" x 44.1")
Shipping Volume		0.70 m³ (24.85 ft³)	0.79 m³ (28.03 ft³)
CONTAMINATION CONTROL			
Contamination Control Methods		1) Main body is electrogalvanized steel with Isocide™ antimicrobial coating; 2) 180˚C high heat sterilization cycle; 3) ULPA filter (optional) - filter must be removed during sterilization cycle 4) 0.2 µm gas inlet filter 5) 1-micron air circulation filter	

All data recorded were observed with unloaded chambers and under optimum factory setting of 22 ±3°C with room humidity of 30-60%.
**Results are achieved when tested at 37°C as set point. Results may vary if set point changes and calibration is needed.*
***For temperature not exceeding 37.2°C.*
****Results are achieved when tested at 5% CO_2 as set point. Results may vary if set point changes and calibration is needed.*
*****For CO_2 level not exceeding 5.2%.*
******Results are achieved when tested at 5% O_2 as set point. Results may vary if set point changes and calibration is needed.*
******* For O_2 level not lower than 4.8%.*
******** Esco does not guarantee condensation-free chamber at humidity level higher than 90%.*

TECHNICAL SPECIFICATIONS

CelCulture® CO_2 Incubator with Integrated Cooling System

Front view

Side view

Rear view

MODEL 170 L

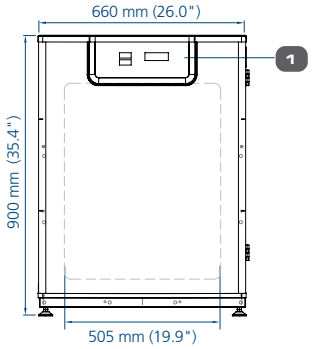

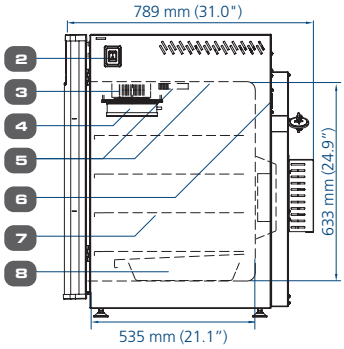

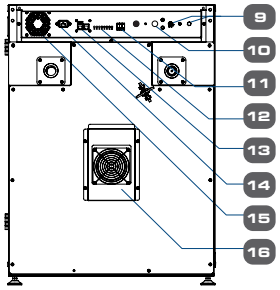

MODEL 240 L

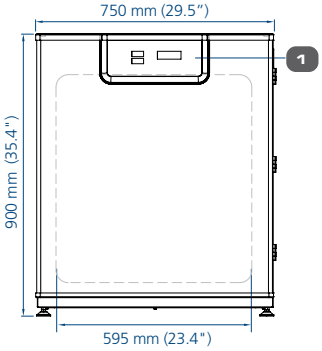

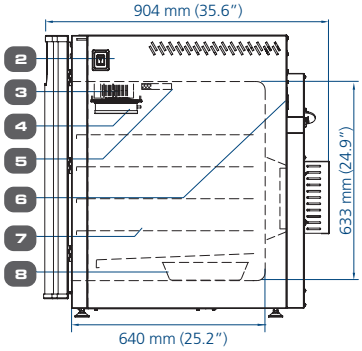

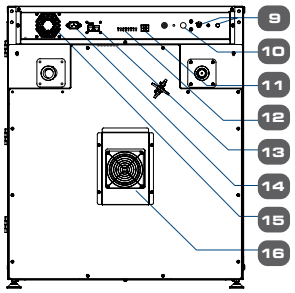

1. Control panel
2. On / off switch
3. Blower fan
4. ULPA filter
5. Sensors
6. Access port
7. Adjustable shelves
8. Water pan with cover
9. CO_2 gas supply
10. N_2 gas supply
11. Alarm contact
12. Analog output
13. RS485
14. Power supply inlet
15. Cooling fan
16. Peltier cooling module

CelCulture® CO_2 Incubator with High-Temperature CO_2 Sensor

Front view

Side view

Rear view

MODEL 170 L

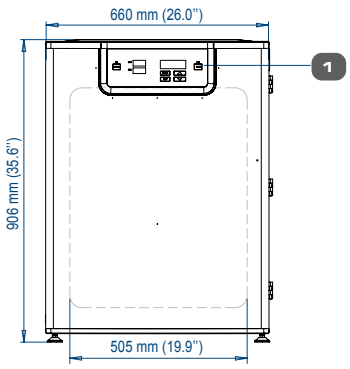

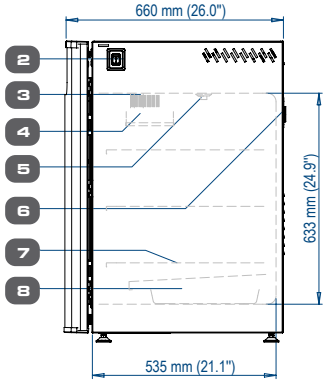

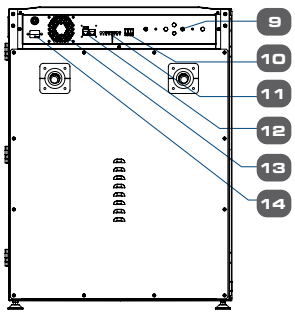

1. Control panel
2. On / off switch
3. Blower fan
4. ULPA filter
5. Sensors
6. Access port
7. Adjustable shelves
8. Water pan with cover
9. CO_2 gas supply
10. Alarm contact
11. Analog output
12. RS485
13. Cooling fan
14. Power Supply Inlet

CelCulture® CO_2 Incubator with High-Temperature CO_2 Sensor

Front view

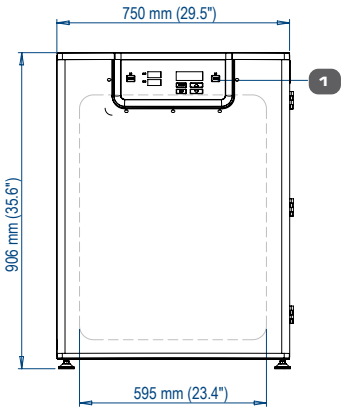

Side view

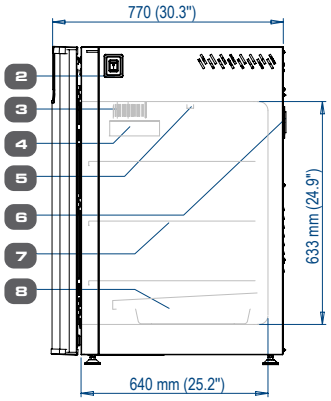

Rear view

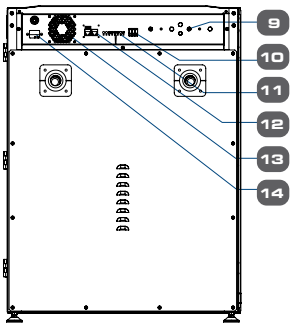

MODEL 240 L

1. Control panel
2. On / off switch
3. Blower fan
4. ULPA filter
5. Sensors
6. Access port
7. Adjustable shelves
8. Water pan with cover
9. CO_2 gas supply
10. Alarm contact
11. Analog output
12. RS485
13. Cooling fan
14. Power Supply Inlet

CelCulture® CO_2 Incubator with High Heat Sterilization

Front view

MODEL 170 L

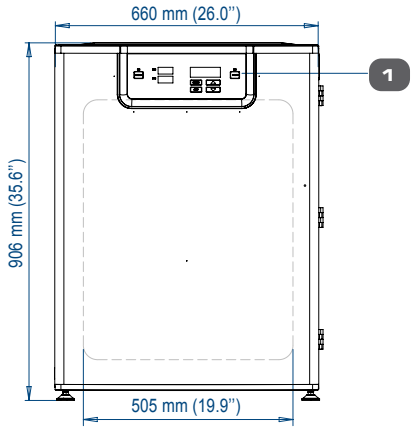

Side view

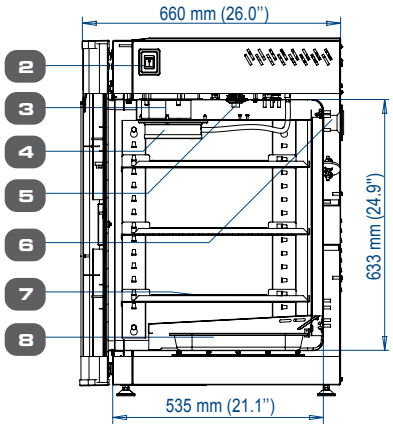

Rear view

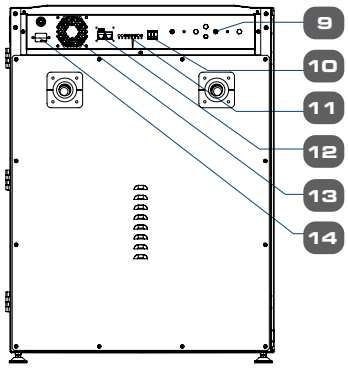

MODEL 240 L

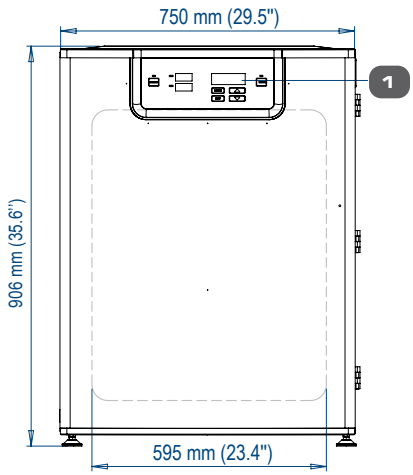

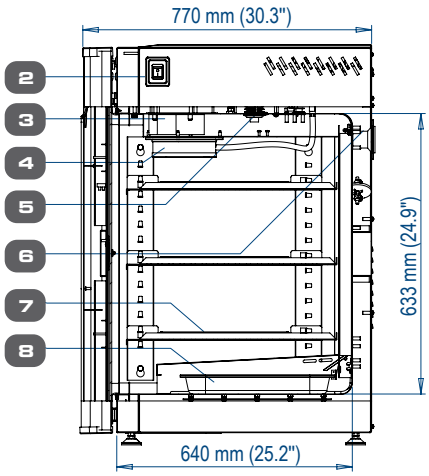

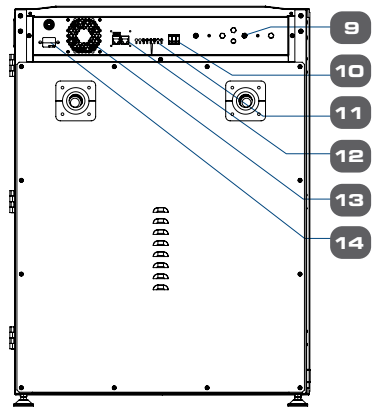

1. Control panel
2. On / off switch
3. Blower fan
4. ULPA filter
5. Sensors
6. Access port
7. Adjustable shelves
8. Water pan with cover
9. CO_2 gas supply
10. Alarm contact
11. Analog output
12. RS485
13. Cooling fan
14. Power Supply Inlet

OPTIONS AND ACCESSORIES



COA-1001 / COA-1001-F Humidity Display

This option allows the incubator to monitor the relative humidity inside the chamber. The probe for the sensor works in freezing conditions (-70°C) and also in temperatures up to 180°C. The sensor is easy to install and has excellent accuracy. The airflow in the chamber does not affect the measurement. The sensor is maintenance-free. It does not need to be removed during 90°C moist heat decontamination cycle.

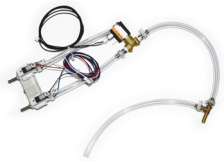

COA-1012 / COA-1012-F CO_2 Backup

This option allows two tanks of CO_2 to be connected to the incubator. It will automatically switch from the primary tank to the secondary tank when low gas pressure is detected on the primary tank.

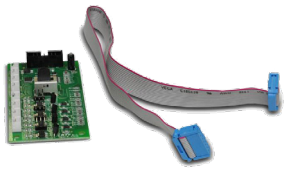

COA-1005 / COA-1005-F Analog Output

A set of relay contacts is provided at the rear of the incubator that allows the incubator to output analog signals representing the temperature, CO_2 / O_2 content and relative humidity, depending on the options available in your incubator. This allows the chamber to be connected to an in-house data acquisition or alarm system. This option can also be field-installed.

The analog signal outputs can be set to operate in either voltage DC (0-5 Vdc) or current (4-20 mA) mode. The factory default setting is voltage. Switch on the board to toggle between the modes.



COA-2030/ COA-2030-F Sealed Inner Door Kit with 2 glass doors (50L)
COA-1006/ COA-1006-F Sealed Inner Door Kit with 4 glass doors (170L)
COA-2029/ COA-2029-F Sealed Inner Door Kit with 4 glass doors (240L)
COA-2040/ COA-2040-F Sealed Inner Door Kit with 6 glass doors (240L)

CelCulture® CO_2 incubators can be equipped with 2, 4 or 6 glass doors, that can be opened horizontally which allows access to defined sections of the incubator without affecting much the inner atmosphere of the chamber. This minimizes recovery time and contamination risks. The sealed-inner door is also reversible as same as the outer door which can be installed to be opened either from-right-to-left or from-left-to right. The sealed-inner door is available as a factory-installed option or field installed retrofit kit.

Note: Not available for CCL-HHS models

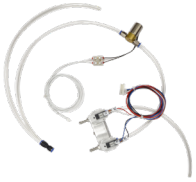

COA-1011 / COA-1011-F N_2 Backup

This option allows two tanks of N_2 to be connected to the incubator. It will automatically switch from the primary tank to the secondary tank when low gas pressure is detected on the primary tank.

Note: not available for CCL-P models.

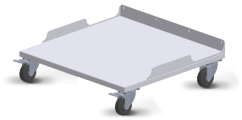

COA-2018-F (50L) / COA-2001-F (170 L) / COA-2019-F (240 L) Roller Base

Roller base is available with casters for mobility of your incubators and to provide protection against floor contamination.

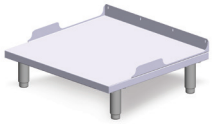

COA-2020-F (50L) / COA-2002-F (170 L) / COA-2021-F (240 L) Floor Stand 170 mm (7.0”) With Adjustable Feet

Floor stands are available with adjustable feet, with a nominal range of 170 mm to 200 mm (7.0” to 8.0”) for comfortable access to the incubator and to avoid floor contamination.

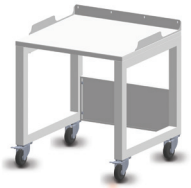

COA-2022-F (50L) / COA-2003-F (170 L) / COA-2023-F (240 L) Floor Stand 670 mm (26.4”) With Casters

This support stand raises the incubator to a height of 670 mm (26.4”) above the floor for comfortable access. It comes with casters for mobility of your incubators.



PROtect Gen 2

Esco PROtect Generation 2 monitoring automatically send data to a central server to monitor temperature and other parameters and send real-time alerts to users. It complies with ISO 17025, GMP, and GLP requirements.



COA-2005-F 2-Stage Gas Regulator for CO_2/N_2

CO_2 and N_2 gas input regulators reduce pressure from the tank to the incubator. It has dual pressure gauges, barbed line connection and shut-off valve. It prevents over-pressurization of the gas supply into the incubator which could cause the tubing to burst.

- CGA 320 connector (U.S. Standard)
- BP-BS341-#8-NT4 connector (British Standard)

Note: Compatible with European DIN477, French NFE29-650 and Australia AS2473

- G5/8-RH connector (China Standard)

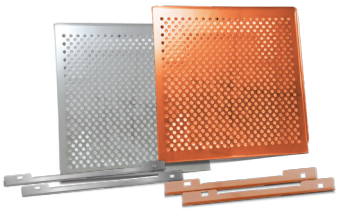

COA-2024-F (50L)/ COA-2007-F (170 L)/ COA-2025-F (240 L) Extra Shelf with Support Rails (Stainless Steel) for Standard Stainless Steel Chamber

COA-2026-F (50L) / COA-2027-F (170 L) / COA-2028-F (240 L) Extra Shelf with Support Rails (Copper) for Standard Copper Chamber

Each CelCulture® CO_2 incubator comes standard with 3 shelves for 50 L / 4 shelves for 170 L & 240L and it can accommodate up to a maximum of 4 shelves for 50 L / 7 shelves for 170 L & 240 L.



COA-2010-F Electronic CO_2 Analyzer, For CO_2 / Temp Measurement

COA-2016-F Electronic CO_2 + O_2 Analyzer, For CO_2 / O_2 / Temp Measurement

COA-2017-F Electronic CO_2 + O_2 + RH Analyzer, For CO_2 / O_2 / RH / Temp Measurement

The electronic analyzer allows the measurement of CO_2 concentration, O_2 concentration, relative humidity and temperature (temperature probe already included).



COA-2012-F 6" Chart Recorder, Temp, 115/230VAC 50/60 Hz

The chart recorder provides an easy-to-read graph of data vs time. It is a reliable, accurate, and stable instrument for on-the-spot written documentation of incubator chamber temperature. This model offers 6" chart of temperature data.



COA-2015-F Inner Door Shelving Kit
(4 Sets With Total 12 Mini-Shelves For One Incubator) (170 L)

These mini-shelves are to be used with the Sealed Inner Door Kit installed. There are 4 sets with a total of 12 mini-shelves on each incubator.



5250001 Voyager Software Kit

Esco Voyager is a PC-based software package developed for the remote monitoring, datalogging and programming / device configuration of Esco controlled environment laboratory equipment. Compatible equipment includes laboratory ovens and incubators, low temperature incubators, CO_2 incubators, and ultra-low temperature freezers.

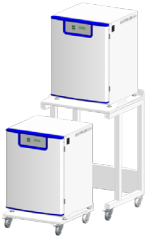

COA-2050 CCL-050 / COA-2004 CCL-170 / COA-2042 CCL-240 2-UNITS FLOOR STAND

This floor stand allows two units to be stacked without being physically in contact with each other. For the lower unit, it uses roller base for mobility and for easy pull out of the lower unit without the need to remove the upper unit in case of troubleshooting. Floor stand for upper unit also has casters for easy relocation.



COA-2013-F CCL-170 / COA-2014-F CCL-240 THERMAL BREAK FOR DIRECT STACKING

When stacking two CO_2 incubators directly without the 2-Unit Floor Stand, the use of a Thermal Break is highly recommended. This accessory is designed to thermally isolate the two units by minimizing heat transfer between the upper and lower incubators. By doing so, it helps maintain stable temperature performance and reduces energy load.



COA-2011-F IQ / OQ DOCUMENTATION

The execution of the IQ / OQ verifies that the incubator is installed and is operating pursuant to the validated Standard Operating Procedures (SOPs).

FLOOR STAND TECHNICAL SPECIFICATIONS

Roller Base, 140 mm (5.5”) Tall, for 170 L

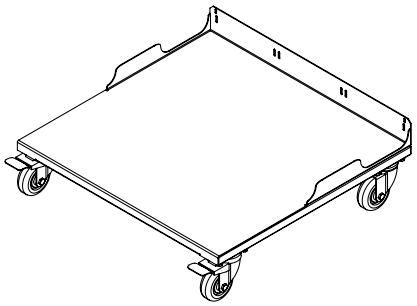

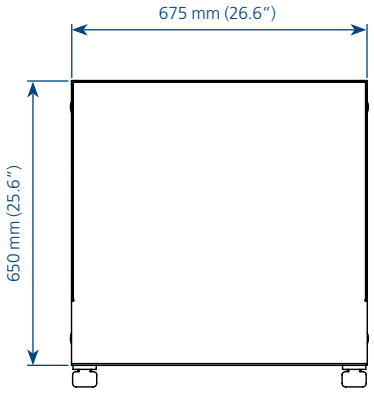

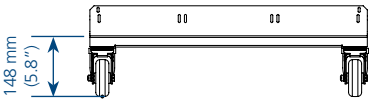

	COA-2018-F (50 L)	COA-2001-F (170 L)	COA-2019-F (240 L)
Dimensions (W x D x H)	510 x 500 x 148 mm 20.1” x 19.7” x 5.8”	675 x 650 x 148 mm 26.6” x 25.6” x 5.8”	765 x 740 x 148 mm 30.1” x 29.1” x 5.8”

Floor Stand 170 mm (7.0”) with Adjustable Feet, Model 170 L

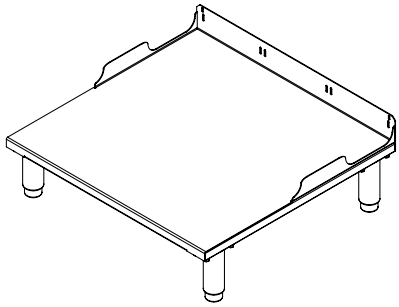

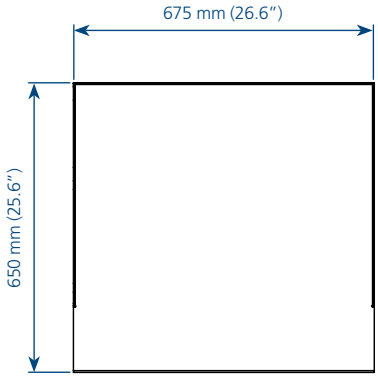

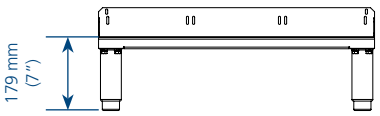

	COA-2020-F (50 L)	COA-2002-F (170 L)	COA-2021-F (240 L)
Dimensions (W x D x H)	510 x 500 x 179 mm 20.1” x 19.7” x 7”	675 x 650 x 179 mm 26.6” x 25.6” x 7”	765 x 740 x 179 mm 30.1” x 29.1” x 7”

Floor Stand 670 mm (26.4”) Tall with Casters, for 170 L

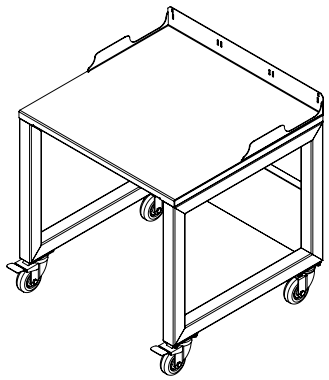

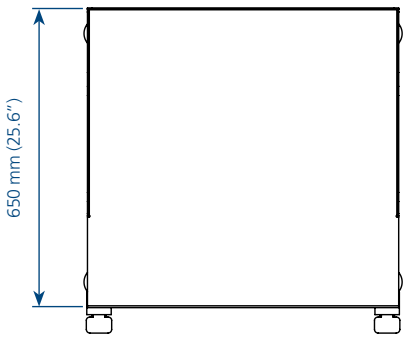

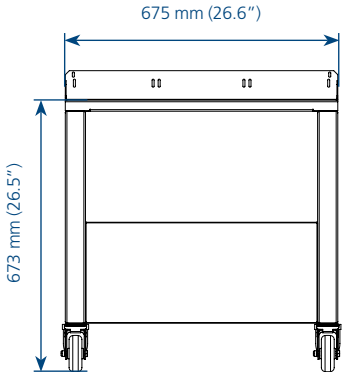

	COA-2022-F (50 L)	COA-2003-F (170 L)	COA-2023-F (240 L)
Dimensions (W x D x H)	510 x 500 x 673 mm 20.1” x 19.7” x 26.5”	675 x 650 x 673 mm 26.6” x 25.6” x 26.5”	765 x 740 x 673 mm 30.1” x 29.1” x 26.5”

2-UNITS FLOOR STAND TECHNICAL SPECIFICATIONS

Model 50 L

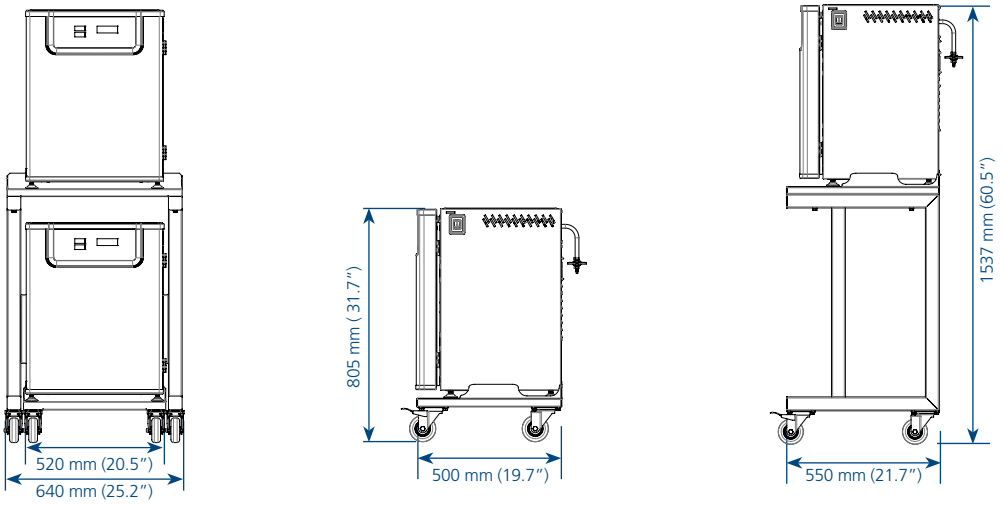

	COA-2050-F (50L) with top unit	COA-2050-F (50L) bottom unit only
Dimensions (W x D x H)	640 x 550 x 1537 mm 25.2" x 21.7" x 60.5"	520 x 500 x 805 mm 20.5" x 19.7" x 31.7"

Model 170 L

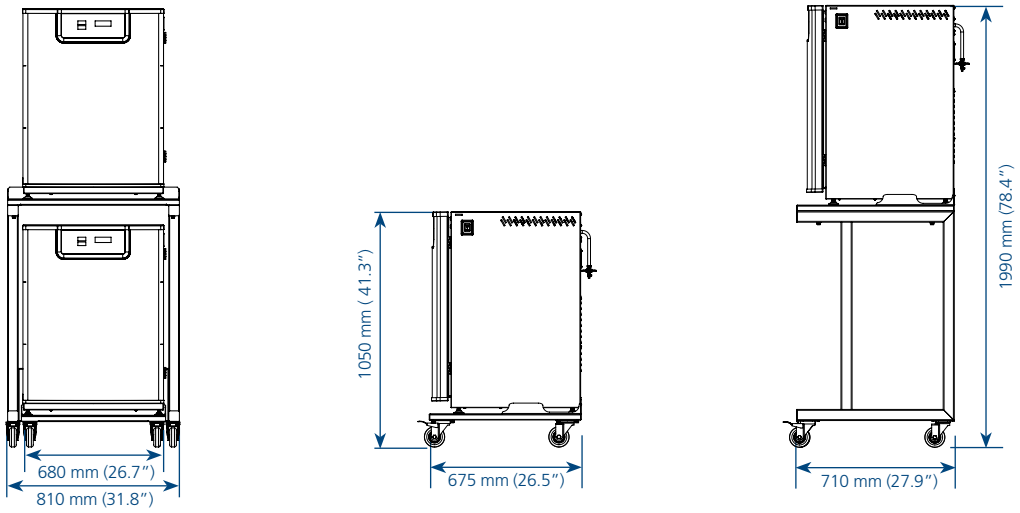

	COA-2004-F (170L) with top unit	COA-2004-F (170L) bottom unit only
Dimensions (W x D x H)	810 x 710 x 1990 mm 31.8" x 27.9" x 78.4"	680 x 675 x 1050 mm 26.7" x 26.5" x 41.3"

Model 240 L

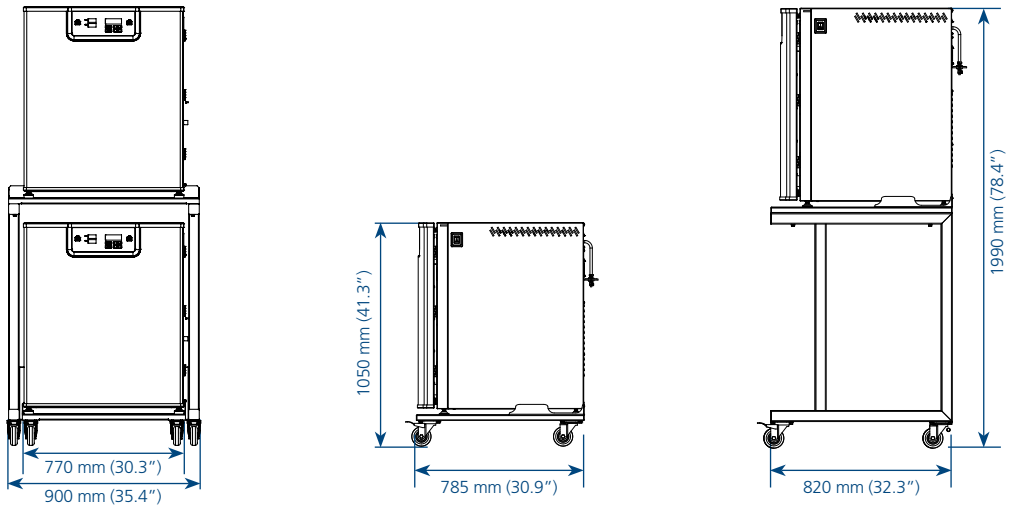

	COA-2042-F (240L) with top unit	COA-2042-F (240L) bottom unit only
Dimensions (W x D x H)	900 x 820 x 1990 mm 35.4" x 32.3" x 78.4"	770 x 785 x 1050 mm 30.3" x 30.9" x 41.3"

ORDERING INFORMATION

ACCESSORIES	ITEM CODE	DESCRIPTION
COA-1001	5170470	Humidity Display, Factory-installed
COA-1001-F	5170471	Humidity Display, Field-installed Kit
COA-1012	5171455	CO_2 Backup (Tank Switcher), Factory-installed
COA-1012-F	5171456	CO_2 Backup (Tank Switcher), Field-installed
COA-1004	5170474	Reversed Door Swing, Factory-installed
COA-1005	5170475	Analog Outputs, Factory-installed
COA-1005-F	5170476	Analog Outputs, Field-installed
COA-2030	5170672	Sealed Inner Door Kit for 50 L (2 Glass Doors with Latches), Factory-installed
COA-2030-F	5170673	Sealed Inner Door Kit for 50 L (2 Glass Doors with Latches), Field-installed
COA-1006	5170477	Sealed Inner Door Kit for 170 L (4 Glass Doors with Latches), Factory-installed
COA-1006-F	5170488	Sealed Inner Door Kit for 170 L (4 Glass Doors withLatches), Field-installed
COA-2029	5170654	Sealed Inner Door Kit for 240 L (4 Glass Doors with Latches), Factory-installed
COA-2029-F	5170655	Sealed Inner Door Kit for 240 L (4 Glass Doors with Latches), Field-installed
COA-2040	5170783	Sealed Inner Door Kit for 240 L (6 Glass Doors with Latches), Factory-installed
COA-2040-F	5170786	Sealed Inner Door Kit for 240 L (6 Glass Doors with Latches), Field-installed
COA-1011	5171453	N_2 Backup for (Tank Switcher), Factory-installed
COA-1011-F	5171454	N_2 Backup for (Tank Switcher), Field-installed
COA-2018-F	5170419	Roller Base (50 L)
COA-2001-F	5170478	Roller Base (170 L)
COA-2019-F	5170420	Roller Base (240 L)
COA-2020-F	5170421	Floor Stand 170 mm (7.0") with Adjustable Feet (50 L)
COA-2002-F	5170479	Floor Stand 170 mm (7.0") with Adjustable Feet (170 L)
COA-2021-F	5170422	Floor Stand 170 mm (7.0") with Adjustable Feet (240 L)
COA-2022-F	5170423	Floor Stand 670 mm (26.4") with Casters (50 L)
COA-2003-F	5170480	Floor Stand 670 mm (26.4") with Casters (170 L)
COA-2023-F	5170424	Floor Stand 670 mm (26.4") with Casters (240 L)
COA-2005-F	5170481	2-Stage Gas Regulator for CO_2 / N_2 Choose one of the connectors below: 1080588 - CGA 320 Connector (US standard) 1080589 - BP-BS34-#8-NT4 Connector (British standard) 1080590 - G5/8-RH Connector (China standard)
COA-2024-F	5170425	Extra Shelf (50 L, Stainless Steel) with Support Rails
COA-2007-F	5070201	Extra Shelf (170 L, Stainless Steel) with Support Rails
COA-2025-F	5170426	Extra Shelf (240 L, Stainless Steel) with Support Rails
COA-2026-F	5170427	Extra Shelf (50 L, Copper) with Support Rails
COA-2027-F	5170428	Extra Shelf (170 L, Copper) with Support Rails
COA-2028-F	5170495	Extra Shelf (240 L, Copper) with Support Rails
COA-2010-F	5170329	Electronic CO_2 Analyzer, For CO_2 / Temp Measurement (with Temperature Probe)
COA-2016-F	5170397	Electronic CO_2 + O_2 Analyzer, For CO_2 / O_2 / Temperature Measurement (with Temperature Probe)
COA-2017-F	5170398	Electronic CO_2 + O_2 + RH Analyzer, For CO_2 / O_2 / RH / Temperature Measurement (with Temperature Probe)
COA-2012-F	1081733	6" Chart Recorder, Temp, 115/230 VAC, 50/60 Hz
COA-2015-F	5170487	Inner Door Shelving Kit for 170 L (4 sets with total 12 mini-shelves for one incubator)
Voyager	5250001	Voyager Software Kit
COA-2050-F	5131589	2-units Floor Stand Stacking Kit (For 50L)
COA-2004-F	5170489	2-units Floor Stand Stacking Kit (For 170L)
COA-2042-F	5170999	2-units Floor Stand Stacking Kit (for 240L)
COA-2013-F	5171457	Accessory, Thermal Break for Direct Stacking (for 170L)
COA-2014-F	5171458	Accessory, Thermal Break for Direct Stacking (for 240L)
COA-2011-F	9010179	IQ / OQ Documentation
PROtect Gen 2	*(see PROtect Gen 2 brochure)*	PROtect Generation 2 monitoring system

Advanced Cell Culture with Esco CO_2 Incubator and CelCradle™

CELCRADLE™ : CRADLE FOR HIGH DENSITY CELLS

CelCradle™ is a cost-effective, single-use benchtop bioreactor system capable of supporting high density culture of adherent cells. It is designed based on the concept of bellow-induced intermittent flow of media and air through porous matrices, where cells reside. This provides a low shear stress, high aeration, and foam-free culture environment.

During operation, the CelCradle™ bottle is partially filled with media and inoculated with cells. The media is raised and lowered alternately to submerge and expose the matrices, creating a dynamic interface between air and media on cell surface to maximize nutrient uptake and oxygen transfer.

CelCradle™ system is part of the tide motion bioreactor system, which features linear scalability up to 5,000 L packed bed volume!

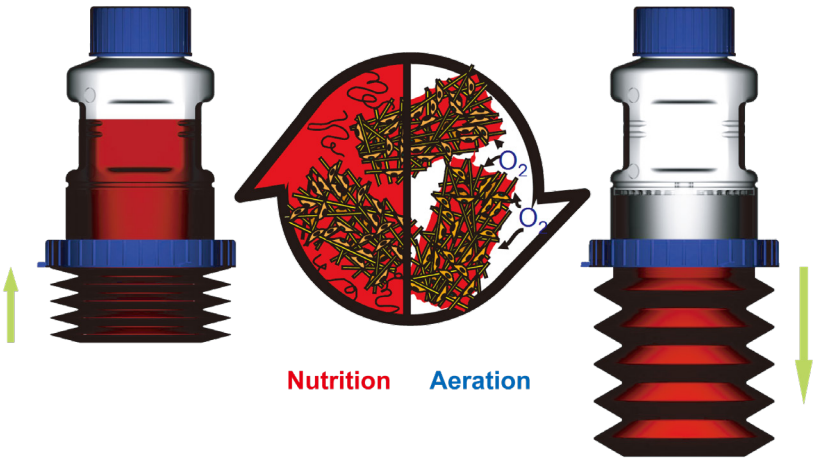

BioNOC™ II: Heart of the Tide Motion System

BioNOC™ II are macrocarriers that allow attachment of cells for adherent cell culture. Each CelCradle™ bottle consists of 5.5g of BioNOC™ II carriers, providing 15,000 cm^2 of surface area for attachment and growth of cells. Apart from its high surface area, BioNOC™ II carriers feature enhanced biocompatibility, long hydrophilicity, high porosity, low lint content, and excellent mechanical strength. The characteristics of BioNOC™ II, combined with the tide motion principle, allow the CelCradle™ system to support the high density culture of adherent cells.

Features:

- Stainless Steel 304 L BA CelCradle™ Stage capable of operating 4 CelCradle™ bottles simultaneously and compatible with a CO_2 incubator
- Pre-sterilized and ready-to-use disposable CelCradle™ bottles
- Provides a low shear stress and foam-free culture environment that has no O_2 limitation
- A single CelCradle™ bottle has the same productivity of up to 18-20 pieces of 850 cm^2 roller bottles
- Compact design allows the CelCradle™ to be placed inside a 6 ft^3 CO_2 incubator
- Easy parameter optimization
- Capable of performing batch, fed-batch or perfusion culture mode
- Compatible with most media formulations including serum-free media
- Contains BioNOC™ II carriers with specially treated surface to allow growth of most anchorage-dependent cells. BioNOC™ II also allows easy harvest of whole cells, cell components or secreted proteins
- Easy-scale up by using additional bottles or by using TideCell® bioreactor system

Applications:

- Human and Animal Vaccines
- Autologous and Allogeneic Cell Therapy
- Culture of anchorage-dependent/ adherent cells
- Overcome limitations of stirred tank bioreactors using microcarriers
- Conversion from Roller Bottles to closed system, single-use cell culture
- Mammalian and insect cell research
- Monoclonal antibody production
- Protein production
- Vaccine production

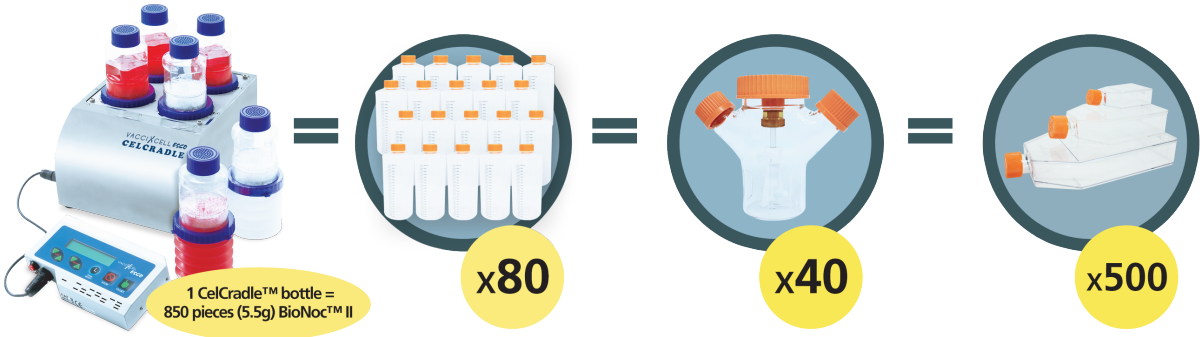

1 CelCradle™ Stage accommodates 4 CelCradle™ bottles

Roller Bottles 850 cm^2

Spinner Flask 500 ml

T-Flask 150 cm^2

CELCRADLE™ BATCH SYSTEM

Useful for batch and semi-batch operation where process components are easily traceable.

Simple to operate - virtually no learning curve

Controller - adjusts nutrient and gas exchange of the bottle

Magnetized controller enables convenient positioning on the outside surface of the incubator



Bottle cap is integrated with 0.22µm ventilation filter

BioNOC™ II - acts a the packed bed where cells can adhere to, simplifying media replacement and product harvesting

Sampling Port - enables aseptic removal of BioNOC™ II macrocarriers for cell counting

Retaining Ring - locks bottle in place in the CelCradle™ Stage

Collapsable bellows

CELCRADLE™ CONTINUOUS SYSTEM

Extremely compact system fits in most standard CO_2 incubators.

Easy to read LED display





Useful for continuous operation where process components are easily traceable

Tubing set with peristaltic pump head enable recirculation and continuous feeding of nutrient

CelFeeder enables 4-pump operation with individual programming setting

Autoclavable pump head supports consistent, calibration-free feeding rate

DISPOSABLE CELCRADLE™ BOTTLES

A complete product line of CelCradle™ meets your specific needs. Different CelCradle™ bottles cover 90% of applications in cell culture.

- Batch, semi-batch or continuous culture
- BioNOC™ II carriers or preferred microcarriers
- Cell harvest with or without trypsin
- Disposable Bottle

Bottle	Item Code	Secreted Protein, viruses (adherent cells)	Cell Harvest (for non-secreted proteins, viruses or cells)	Carrier Harvest (for protein extraction or reuse of carriers)
CelCradle™ 500	1400001	Best Application	Applicable, but not optimal	Applicable, but not optimal
CelCradle™ 500A	1400003	Applicable, but not optimal	Best Application	Best Application
CelCradle™ 500P	1400002	Best Application	Applicable, but not optimal	Applicable, but not optimal
CelCradle™ 500AP	1400004	Applicable, but not optimal	Best Application	Best Application

OPTIONS AND ACCESSORIES

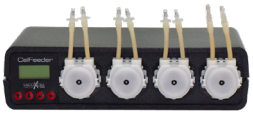

CelFeeder

The CelFeeder pump module is an auxiliary peristaltic pump used for the recirculation or perfusion processes for CelCradle™ 500 high density continuous cell culture system.



Tubing Complete Set

The Tubing Complete Set includes pre-assembled tubes, reusable pump head and head plate with a sampling port to support the continuous culture in CelCradle™-500P system.

Disposable Tubing Accessory

The Disposable Tubing Accessory provides simple options to replace the tubes in the Tubing Complete Set.This replacement avoid tubing deterioration during operation. It is recommended to replace the tubes after three (3) times of use.



GlucCell® Glucose Monitoring System

The GlucCell® enables simple and accurate glucose measurements using disposable test strips.



Crystal Violet Dye Nucleus Count Kit

The Crystal Violet Dye Nucleus Count Kit contains crystal violet dye, citric acid and detergent used to disrupt the cells and release cell nuclei for cell count. The CVD kit is an efficient reagent for cell count in a porous matrix.

ORDERING INFORMATION

Product Name	Item Code	Package
CelCradle™ System Complete	2230006	1 x CelCradle™ Stage 1 x GlucCell® Glucose Monitoring System
CelCradle™ Continuous System Complete	2230007	1 x CelCradle™ Stage 1 x GlucCell® Glucose Monitoring System 1 x CelFeeder Pump 2 x Tubing Complete Set
CelCradle™ Stage	2230005	1 x Main Console 1 x Control Box 1 x 100-240 V power adapter 1 x Signal Cable 1 x Manual CD 2 x Forceps 1 x Crystal Violet Dye Nucleus Count Kit
CelFeeder Pump	1400067	1 x CelFeeder Pump
Tubing Complete Set	1400011	1 x Disposable Tubing Accessory 1 x Pump Head 1 x Head Plate
Disposable Tubing Accessory	1400013	5 x Disposable Tubing Accessory
Disposable Tubing Set & Pump Head	1400012	1 x Tubing Set 1 x Pump Head
GlucCell® Glucose Monitoring System	1400009	1 x GlucCell® Glucose meter 2 x Glucose Test Strip Bottles (2 x 25 pcs)
GlucCell® Glucose Test Strip	1400010	2 x Glucose Test Strip Bottles (2 x 25 pcs)
Crystal Violet Dye Nucleus Count Kit	1400014	1 x CVD Bottle (100ml/bt)
Filtered Cap	1400015	Cap for CelCradle™ Bottle (Pack of 6)
Non-Vented Cap	1400016	Cap for CelCradle™ AP/P Bottle (Pack of 8)
Forceps	1400017	Used for sampling of BioNOC™ II carriers

ESCO LIFESCIENCES GROUP

42 LOCATIONS IN 21 COUNTRIES ALL OVER THE WORLD

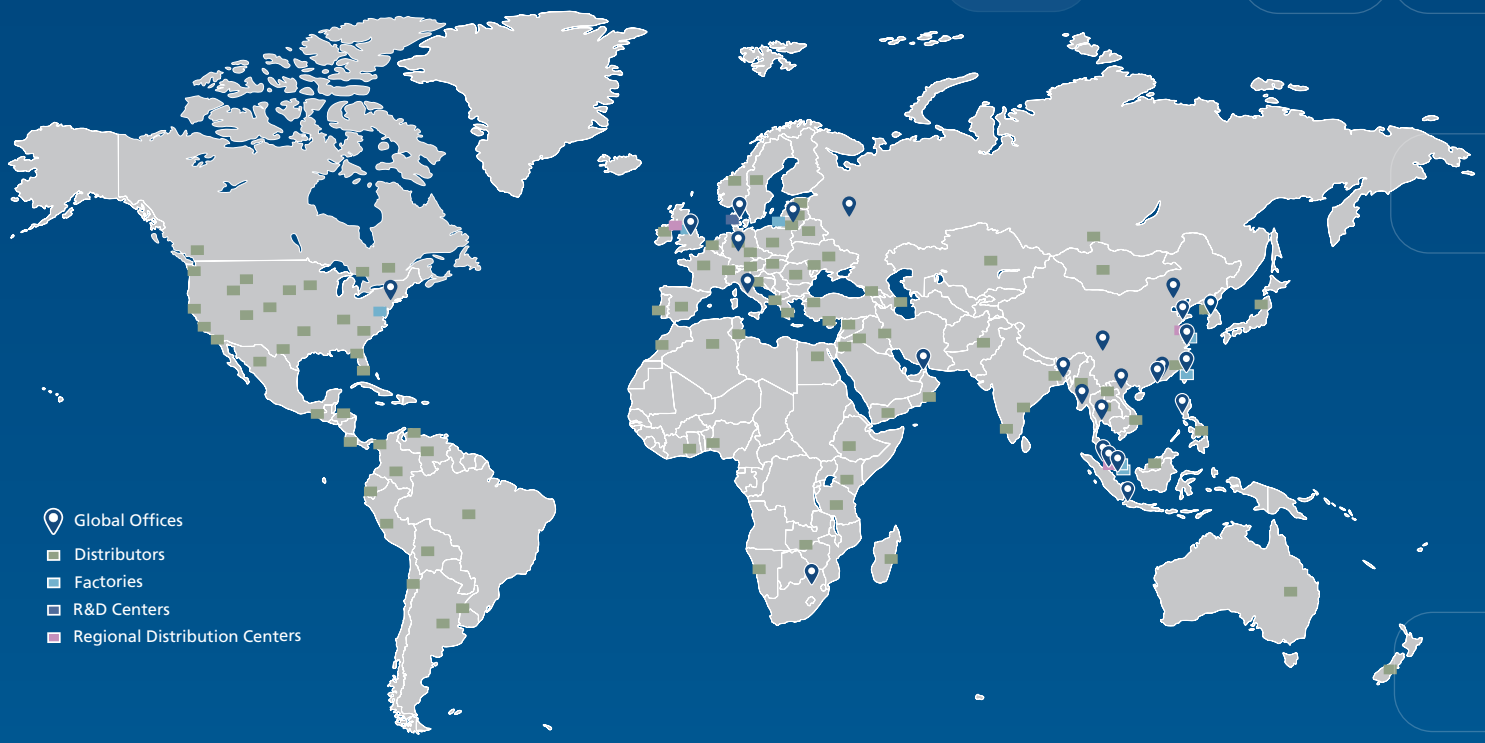

Follow us on social media, download our apps, and scan the QR code for more info.

@EscoLifesciences | @EscoLifesciences | @EscoLifesci | @Esco | @EscoLifesciences | @EscoLifesciences | Google Play Esco Lifesciences | App Store Esco Lifesciences

ESCO LIFESCIENCES GROUP

Esco Micro Pte. Ltd. • 19 Changi South Street 1 • Singapore 486 779
Tel +65 6542 0833 • mail@escolifesciences.com
www.escolifesciences.com

Esco Technologies, Inc. • 903 Sheehy Drive, Suite F, Horsham, PA 19044, USA
Tel: +1 215-441-9661 • eti.admin@escolifesciences.com

Esco Lifesciences Group Offices: Bangladesh | China | Denmark | Germany | Hong Kong | India | Indonesia | Italy | Japan | Lithuania | Malaysia | Myanmar | Philippines | Russia | Singapore | South Africa | South Korea | Taiwan | Thailand | UAE | UK | USA | Vietnam

9010057_CelCulture CO2 Incubator brochure_A4_vX_111026

Esco can accept no responsibility for possible errors in catalogues, brochures and other printed materials. Esco reserves the right to alter its products and specifications without notice. All trademarks and logotypes in this material are the property of Esco and the respective companies.